Hydraulic Threaded-Body Clamping Module

pull-type, single and double acting, with anti-rotation device
max. operating pressure 500 bar

The hydraulic threaded-body pull-type clamping module was developed for screwing in into:

- **standardized housings** (see page 2)
- **fixture bodies or manifold blocks** (see figure 2)
- **fixture base plates** or **intermediate plates for pallets** or **machine tool tables** (see page 2)

Application examples

Figure 1 shows axial clamping of a workpiece **in connection with a C-washer** as per DIN 6371/6372. The hydraulic threaded-body clamping module is integrated in a standardized housing (dimensions see page 2).

The C-washer (loose part) has to be handled for each clamping process.

Looking for optimzation of such tasks use of elastomer spring elements as well as use of clamping discs was examined and found usefull.

When clamping with **elastomer spring elements** (see figure 2) the workpiece has to be centered by a shoulder at the location flange, since only axial and radial clamping forces can be introduced by the elastomer spring element.

When using **discs** (see figure 3) centering is provided by the discs as the axial and radial forces are applied.

The decision which clamping element has to be used, depends on the tolerance of the workpiece and the required axial clamping forces.

Important notes

Operating conditions, tolerances and other data see data sheet A 0.100.

Element

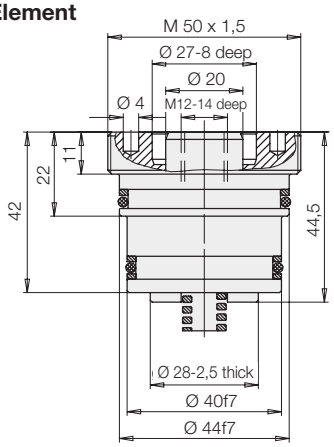

Figure 1 - with C-waher

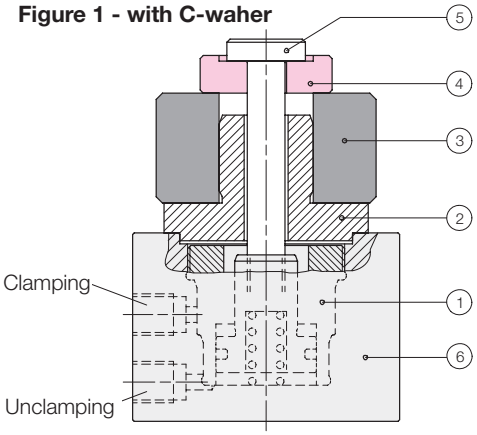

① Clamping module ② Workpiece carrier
③ Workpiece ④ C-washer ⑤ Tie rod
⑥ Housing for clamping module

Mounting dimensions

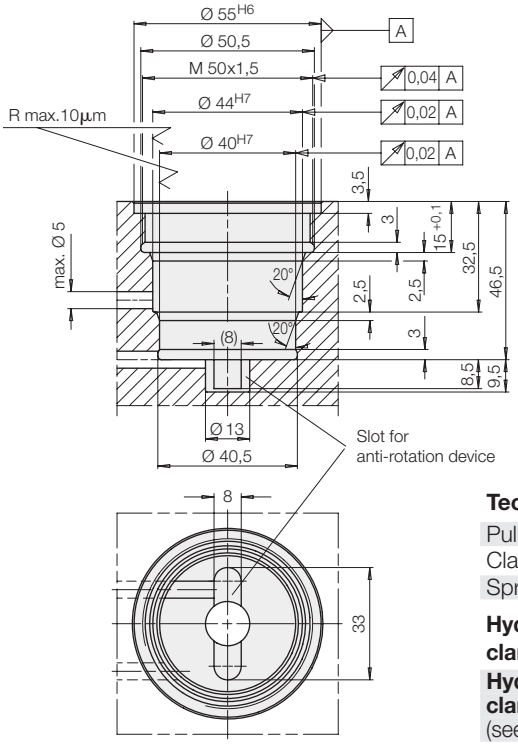

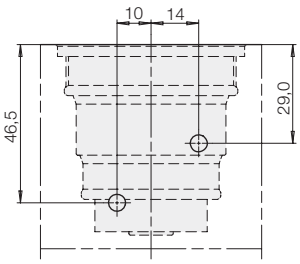

Technical characteristics

Pulling force at 500 bar	[kN]	24.5
Clamping stroke, pulling	[mm]	6.0
Spring force	[N]	80-200

Hydraulic threaded-body clamping module	**Part-no. 1574-811**
Hydraulic threaded-body clamping module with housing (see page 2)	**1574-812**

Figure 2 - with elastomer spring element

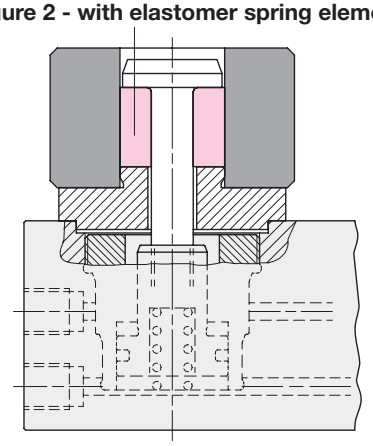

Figure 3 - with disc

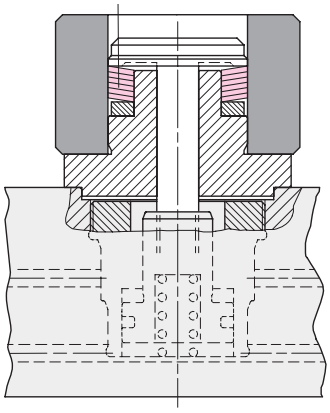

Hydraulic threaded-body clamping module with housing

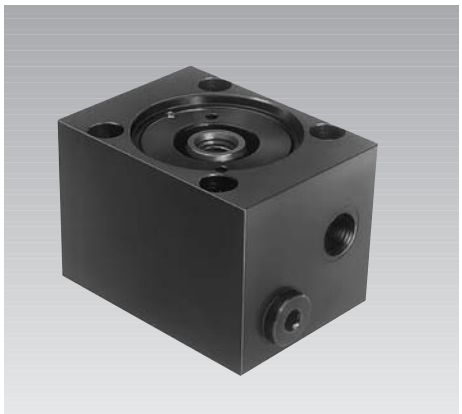

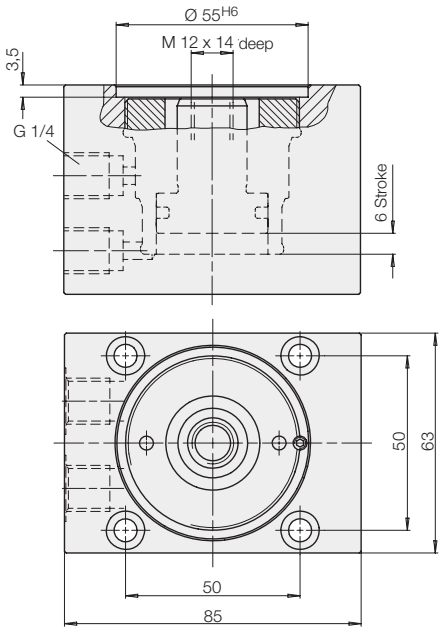

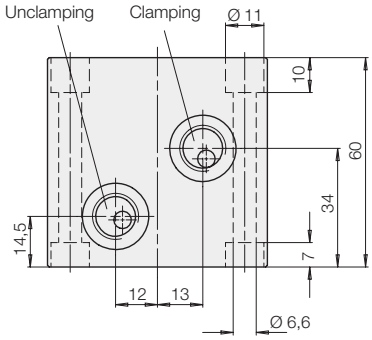

Hydraulic threaded-body clamping module with housing	Part-no. 1574-812

Application example

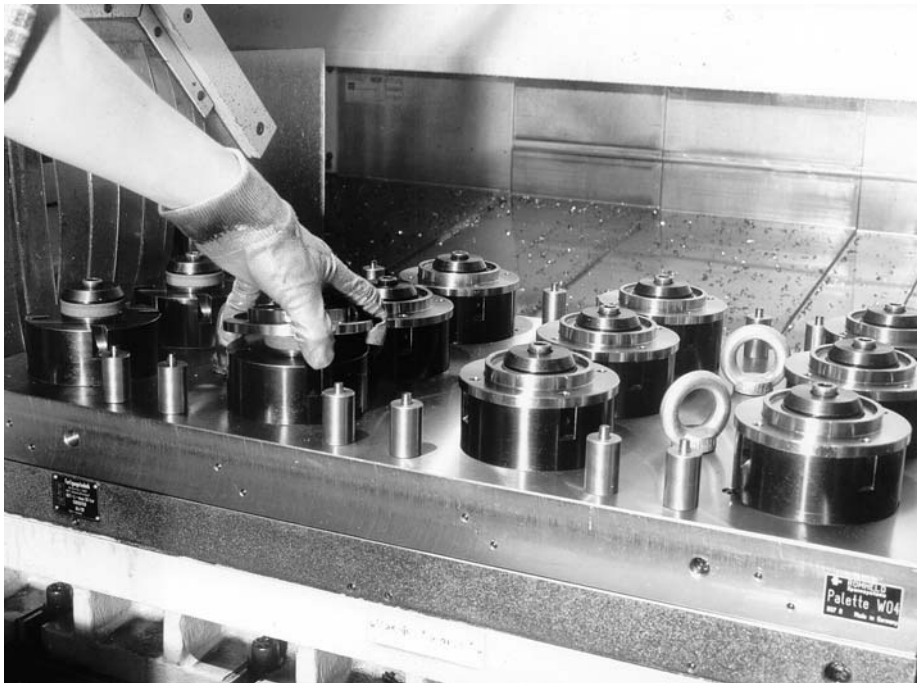

Installation of hydraulic clamping modules in the base plate of a multiple clamping fixture

Transmission of the clamping force is made by an elastomer spring element Ø50xØ17x32 mm high. The workpieces are centered by the shoulder at the flange. In such an arrangement for clamping neither a wrench is required nor a C-washer has to be handled.