ROEMHELD
HILMA ▪ STARK

Zero Point Clamping System SPEEDY classic 1

WM-020-217-01-en

Products | for | productivity

Set your manu-facturing to

ROEMHELD
HILMA ▪ STARK

GO!

Maximum productivity

- Using the zero point clamping system SPEEDY classic you will increase your production times to a maximum. Adjustment and checking processes are no longer necessary at all, this means more time for your production.
- With the zero point clamping system by STARK, adjustment and checking processes on processing machines can be carried out more easily.

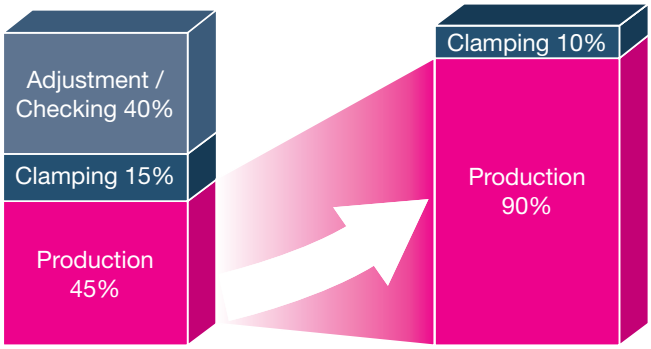

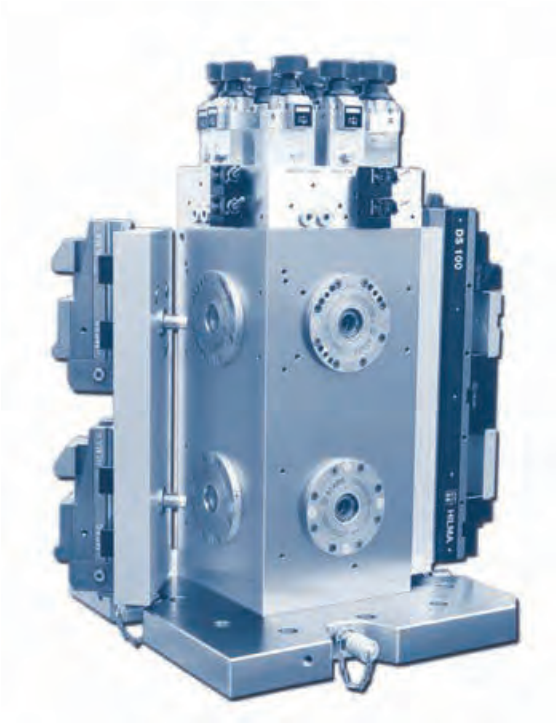

Maximum flexibility

- SPEEDY classic has a common interface. As a result all equipment can be used on all machines.

Maximum machine availability

- Machining processes can be interrupted for urgent orders without loss of time and completed later.

SPEEDY classic – an investment that pays for itself in a very short space of time.

STARK clamping systems overview

Differentiation is by the method of actuation and varying size of the retractable nipples:

SPEEDY classic - clamp mechanically / release hydraulically

Most comprehensive and versatile zero point clamping system,

- Four sizes and numerous variants

SPEEDY classic 1
Catalogue order no. WM-020-217-01-en

SPEEDY classic 2
Catalogue order no. WM-020-276-02-en

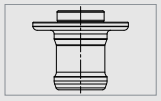

SPEEDY classic 3
Catalogue order no. WM-020-278-01-en

SPEEDY classic 4
Catalogue order no. WM-020-280-00-en

SPEEDY metec - clamp / release mechanically

Robust mechanical zero point clamping system for simple, low-cost solutions,

- Three sizes

SPEEDY metec 1
Catalogue order no. WM-020-293-01-en

SPEEDY metec 2
Catalogue order no. WM-020-293-01-en

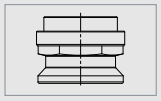

SPEEDY metec 3
Catalogue order no. WM-020-293-01-en

SPEEDY airtec - clamp mech. / release pneum.

Pneumatic zero point clamping system,

- One size and numerous variants

SPEEDY airtec 1
Catalogue order no. WM-020-288-01-en

SPEEDY hydratec - clamp / release hydraulically

Hydraulic, double action zero point clamping system for very high clamping speeds,

- One size and numerous variants

SPEEDY hydratec 1
Catalogue order no. WM-020-290-01-en

system 3000 - clamp / release hydraulically

Double action zero point clamping system with small size and high clamping force,

- One size and numerous variants

system 3000
Catalogue order no. WM-020-333-01-en

system 4000 - custom systems

Flexible zero point clamping system for mechanical, pneumatic and hydraulic applications,

- One size and numerous variants

system 4000
Catalogue order no. WM-020-067-00-en

Technical data see page i.10 / for data sheets and 3D data see www.stark-inc.com

Stark Spannsysteme GmbH
A-6840 Götzis
Tel. +43 (0) 5523 64739-0
Fax +43 (0) 5523 64739-7
verkauf@stark-inc.com
www.stark-inc.com

Table of Contents SPEEDY classic 1

i Information

Systems overview / Table of Contents . . . . . i.4 - i.5
Function description / Advantages / Technical data / Tilting torque calculation . . . . . i.6 - i.11

1 Flush Mount

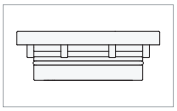

STANDARD Flush Mount round 1.2
STANDARD Flush Mount square 1.3
STANDARD Flush Mounting round with media ducts 1.4
TORNADO Flush Mounting round / square with raised supports and blow-out ducts . . . 1.5
TORNADO Flush Mounting round / square with raised supports, blow-out ducts and coolant drainage 1.6
TWISTER Flush Mounting round with raised supports and blow-out ducts 1.7
STANDARD Module round 1.8
TORNADO Module round with raised supports and blow-out ducts 1.9
COMPACT Flush Mount round / flattened . . . . . 1.10 - 1.11
Set plate 2 / 4 / 6 / 8 . . . . . 1.12 - 1.13

2 Surface Mount

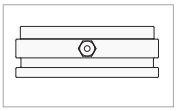

STANDARD Surface Mount round / square 2.2
STANDARD Surface Mount round / square with centring shank 2.3
SET 4 / SET 6 . . . . . 2.4
VARIO COMPACT / STANDARD . . . . . 2.5 - 2.6
VARIOGRIP COMPACT / STANDARD 2.7
Fixing clamp 1 / 2 / 3 incl. fastening . . . . . 2.8 - 2.10
Accessories for pipework . . . . . 2.11 - 2.15

3 Retractable nipple

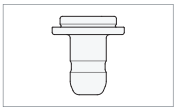

Retractable nipple with zero point / with equaliser / without equaliser . . . . . 3.2 - 3.3
Nipple fastening D / E . . . . . 3.4 - 3.5
Setscrew / Bearing plate / Spacer washer for TWISTER . . . . . 3.6 - 3.7
Flange retractable nipple/ Flange with zero point 3.8
Flange with equaliser / Flange without equaliser 3.9

4 Pressure boosters

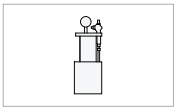

RECORD / BOOSTER 4.2
Hydraulic hose / Pedal control 4.3
Hydraulic clamping pump 4.4
Hydraulic pump set 4.5

5 Plates, angles, mounting towers

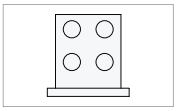

Fast closing clamp plates / Fast closing clamp face plate 5.2
Angle / Double angle 5.3
Mounting tower with / without valve system 5.4
Vice pallet 5.5

6 Media ducts

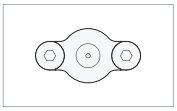

Media duct NW 4 coupling mechanism / coupling nipple . . . . . 6.3 - 6.4
Multiple coupling NW4 coupling mechanism / coupling nipple . . . . . 6.5 - 6.6
Media duct NW 4 blanking plug 6.7
Media duct pliers 6.8
Clamp control valve mechanical 6.9

7 SPEEDY accessories

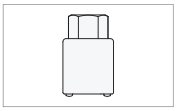

Shut-off valve 7.1
Retractable nipple key / Torque wrench / Sealing plug 7.2
Transport protection / Service-set O-rings & cup springs / Circlip pliers . . . . . 7.3 - 7.4
Mechanical insertion force tester 7.5
Hydraulic installation aid / Installation aid 7.6

Technical data see page i.10 / for data sheets and 3D data see www.stark-inc.com

Stark Spannsysteme GmbH
A-6840 Götzis
Tel. +43 (0) 5523 64739-0
Fax +43 (0) 5523 64739-7
verkauf@stark-inc.com
www.stark-inc.com

Subject to modifications
WM-020-217-01-en

Function description SPEEDY classic 1 - positioning and clamping in one function

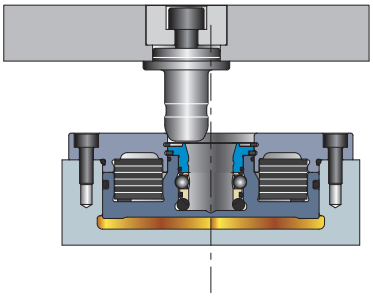

Insert and pre-position

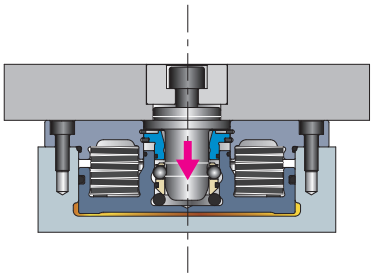

Position and clamp

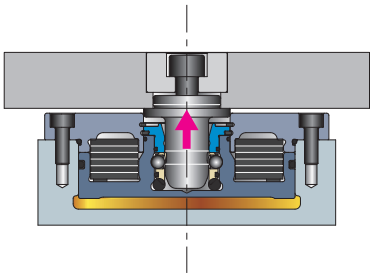

Release and lift off

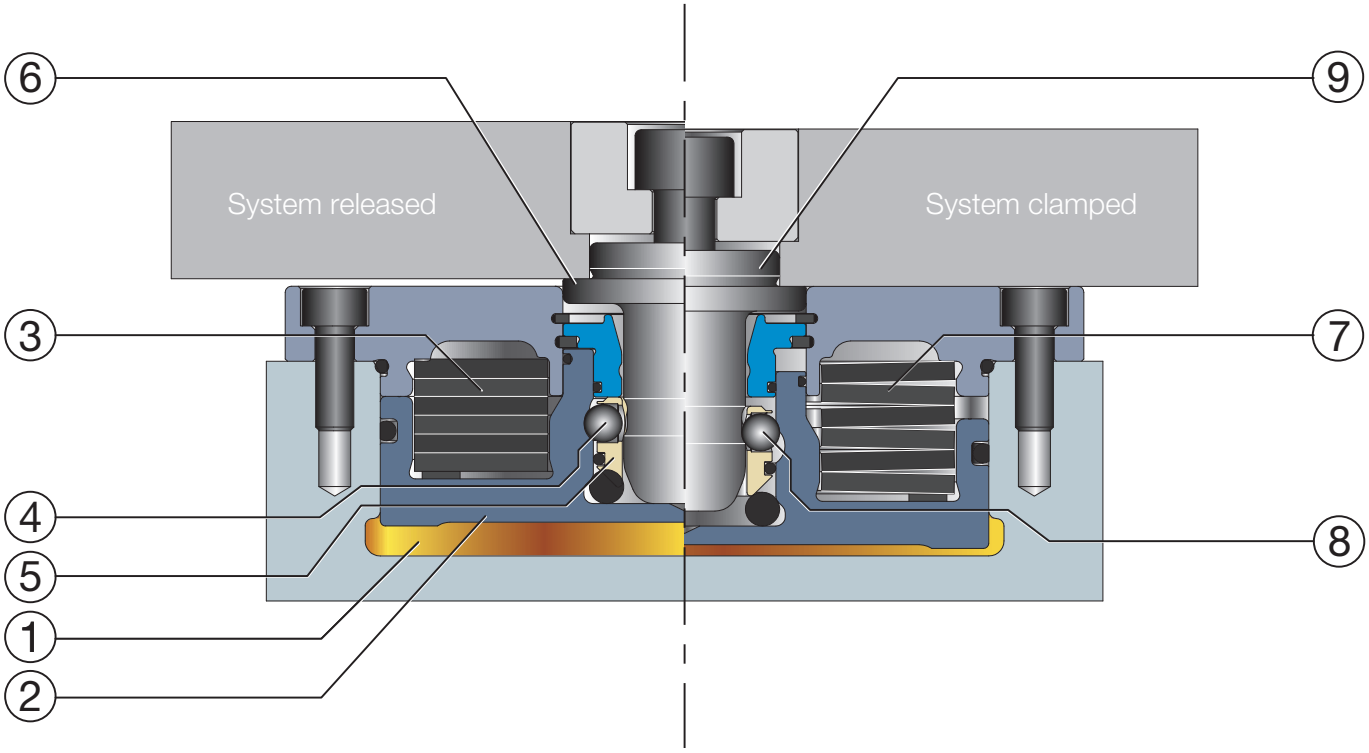

Releasing hydraulically

- Hydraulic pressure (1) is applied to the piston (2) and the piston moves upwards.
  The spring pack (3) is compressed.
- The balls (4) in the ball cage (5) move outwards to the parking position.
- The retractable nipple (6) moves into the fast closing clamp until it is in contact with the base of the piston.
- The retractable nipple (6) is pre-positioned.

Clamping mechanically

- The hydraulics are de-pressurised, the oil pressure drops to 0 bar.
- The spring pre-load is applied via the piston (2), the piston moves downwards.
  The fit is aligned, the retractable nipple (9) highly precisely positioned.
- The balls (8) are positively positioned between piston and retractable nipple in the related contour.
- The pre-load on the springs (7) now acts downwards directly and constantly on the retractable nipple.

Technical data see page i.10 / for data sheets and 3D data see www.stark-inc.com
Stark Spannsysteme GmbH
A-6840 Götzis
Tel. +43 (0) 5523 64739-0
Fax +43 (0) 5523 64739-7
verkauf@stark-inc.com
www.stark-inc.com
Subject to modifications
WM-020-217-01-en

Proven technology with a system - original down to the smallest detail

Advantages to be worth it!

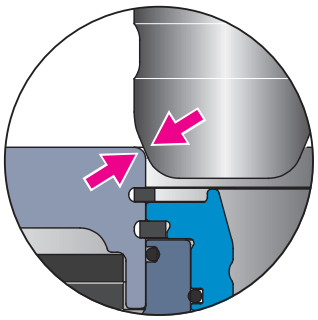

Wear-proof insertion and pre-centring

Due to the special retractable nipple contour, the fit is not damaged on insertion in the SPEEDY.

High alloy tool steel provides resilience to wear.

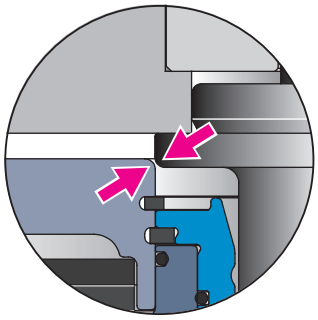

Matched radii on the bore

Matched radii on the SPEEDY and on the insertion nipple result in exact pre-positioning.

The fit is automatically aligned by drawing in the pallet.
The operator only needs to set down or remove the pallet.

No chips can be jammed in the cylindrical bore.

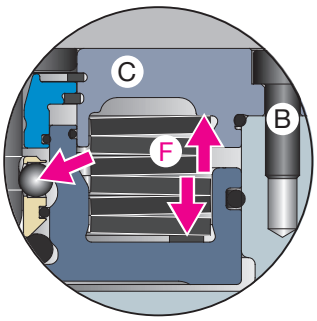

High positioning accuracy due to optimal application of force - no bending or lifting

The retractable nipples are fixed positively and with very high precision - this action has a vibration attenuation effect and increases the quality of the surface to be machined as well as the life of the tools.

The force from the springs (F) acts close to the fastening screw (B). As a result there is no bending on the cover (C).

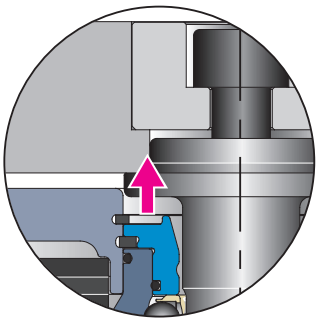

Lifting out of the fit

On release the retractable nipple is lifted out of the fit in a controlled manner and the operator can see that the system has been released. The result is safe and very straightforward handling.

Technical data see page i.10 / for data sheets and 3D data see www.stark-inc.com

Stark Spannsysteme GmbH
A-6840 Götzis
Tel. +43 (0) 5523 64739-0
Fax +43 (0) 5523 64739-7
verkauf@stark-inc.com
www.stark-inc.com

Subject to modifications
WM-020-217-01-en

Other advantages of SPEEDY classic 1 - discover the difference

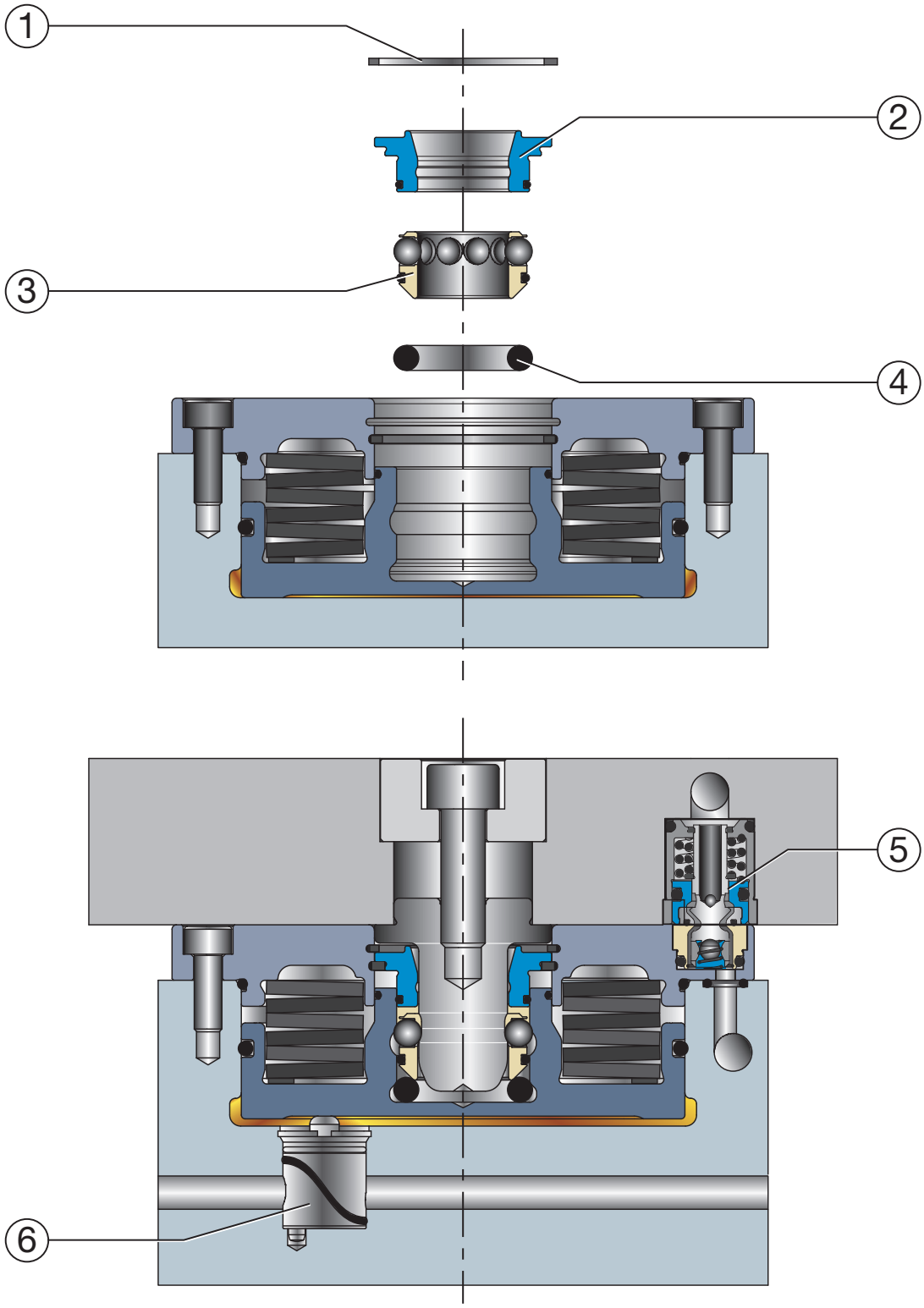

Technical data see page i.10 / for data sheets and 3D data see www.stark-inc.com

Stark Spannsysteme GmbH
A-6840 Götzis
Tel. +43 (0) 5523 64739-0
Fax +43 (0) 5523 64739-7
verkauf@stark-inc.com
www.stark-inc.com

Subject to modifications
WM-020-217-01-en

Well thought out solutions -
reliable clamping for a very wide range of tasks

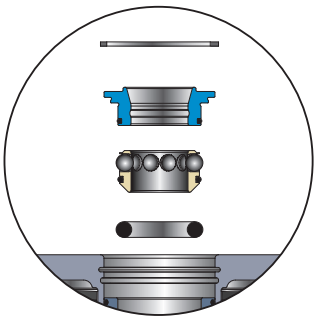

Simple cleaning

During machining, soiling of the clamping system over the long term is inevitable. For this reason ease of cleaning is very important.

On SPEEDY classic the retaining ring (2), ball cage (3) and O-ring (4) can be straightforwardly taken out after removing the locking ring (1), and then cleaned and re-fitted. This feature simplifies maintenance and provides the shortest possible downtimes.

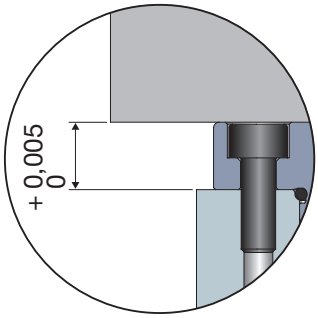

Precise contact

Very high accuracy to reduce tolerance errors (bearing plate thickness manufactured to within 5 µm).

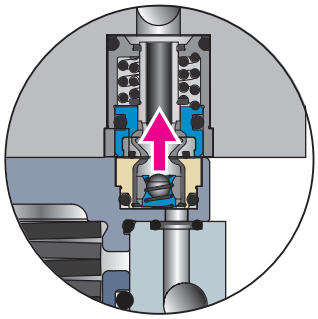

Integrated media ducts

For carrying media, e.g. oil, water etc. if required SPEEDY classic is equipped with integrated media ducts (5). The ducts are positioned and coupled automatically during clamping.

In this way, e.g., clamping devices fitted to the machine pallets can be supplied with power (hydraulic, pneumatic etc.). The coupling force is applied by the SPEEDY - straightforward handling, the pallet is fully automatically positioned, clamped and coupled.

For more information see page 6.2.

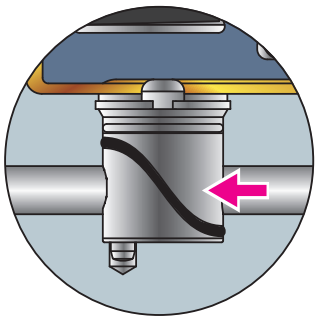

Clamping check

For safety reasons, a clamping check is strongly recommended on all machines that rotate at high speeds. For this purpose SPEEDY classic can be equipped with a mechanical clamp control valve (6).

The evaluation of the clamping check can be integrated directly in the machine control system. Existing machines can also be upgraded using an appropriate hydraulic unit and suitable control system.

Your STARK partner will be pleased to provide you with information on the optimal solution.

For more information see page 6.2.

Stark Spannsysteme GmbH
A-6840 Götzis
Tel. +43 (0) 5523 64739-0
Fax +43 (0) 5523 64739-7
verkauf@stark-inc.com
www.stark-inc.com

Subject to modifications
WM-020-217-01-en

Technical data -
transparency from the start

		STANDARD	STANDARD	TORNADO	TORNADO	TWISTER	COMPACT
		with increased clamping cycles		with increased clamping cycles			
Maintenance interval, spring pack		100.000	20.000	100.000	20.000	100.000	15.000
Insertion force [1]	[N]	6.700	10.000	6.700	10.000	6.700	6.500
Retention force [2]	[N]	25.000	25.000	25.000	25.000	25.000	25.000
Release pressure	[bar]	35-40	75-80	35-40	75-80	35-40	175-180
Max. pressure*	[bar]	80	80	80	80	80	180
Lifting force at max.	[N]	10.000	10.000	10.000	10.000	10.000	10.000
Lateral forces max. allowed	[N]	7.000	7.000	7.000	7.000	7.000	7.000
Tilting torque	[Nm]	250	350	250	350	250	150
Twisting torque **	[Nm]	300	300	300	300	300	---
Oil volume	[cm^3]	20	20	20	20	20	7
Operating temperature	[°C]	10-80	10-80	10-80	10-80	10-80	10-80
Min. clamping time allowed	[s]	ca. 2	ca. 2	ca. 2	ca. 2	ca. 2	ca. 2
Min. release time allowed	[s]	ca. 2	ca. 2	ca. 2	ca. 2	ca. 2	ca. 2
Radial pre-positioning [3]	[mm]	± 3	± 3	± 3	± 3	± 3	± 3
Max. axial pre-positioning automated loading	[mm]	- 0,3	- 0,3	- 0,3	- 0,3	- 0,3	- 0,3
Repeatability [4]	[mm]	< 0,005	< 0,005	< 0,005	< 0,005	< 0,005	< 0,005
System accuracy [5]	[mm]	< 0,01 ***	< 0,01 ***	< 0,01 ***	< 0,01 ***	< 0,01 ***	< 0,01 ***
Weight	[kg]	ca. 3	ca. 3	ca. 3	ca. 3	ca. 3	ca. 1.5

* With increased clamping cycles
** Only on square version
*** With appropriate design and adjustments, accuracies in the µ-range are possible.

[1] Insertion force — The insertion force (pre-load on the spring pack) refers to the load up to which the zero point is guaranteed. The insertion force stated must not be exceeded,

[2] Retention force — Retention force refers to the max. overload up to which the nipple will continue to be retained, but the zero point has already been left (designed for M8 screw).

[3] Radial pre-positioning — The loading device must have play in the case of automated handling.

[4] Repeatability — Repeatability generally refers to the accuracy with which the same pallet is positioned on changing on the same interface.

[5] System accuracy — System accuracy refers to the accuracy resulting from changing several pallets, e.g. on different machines.

Technical data see page i.10 / for data sheets and 3D data see www.stark-inc.com
Stark Spannsysteme GmbH
A-6840 Götzis
Tel. +43 (0) 5523 64739-0
Fax +43 (0) 5523 64739-7
verkauf@stark-inc.com
www.stark-inc.com
Subject to modifications
WM-020-217-01-en

Tilting torque calculation example

Profit from our specialist competence

Example:
Fast closing clamp plate 4x SPEEDY classic 1 with 200 x 200 spacing and max. feed force of 7 kN with distance of 400 mm.

Question:
Due to the predominance of roughing work, the system is to be checked for double safety. Are the insertion force, number of fast closing clamps and the selected spacing right for this application?

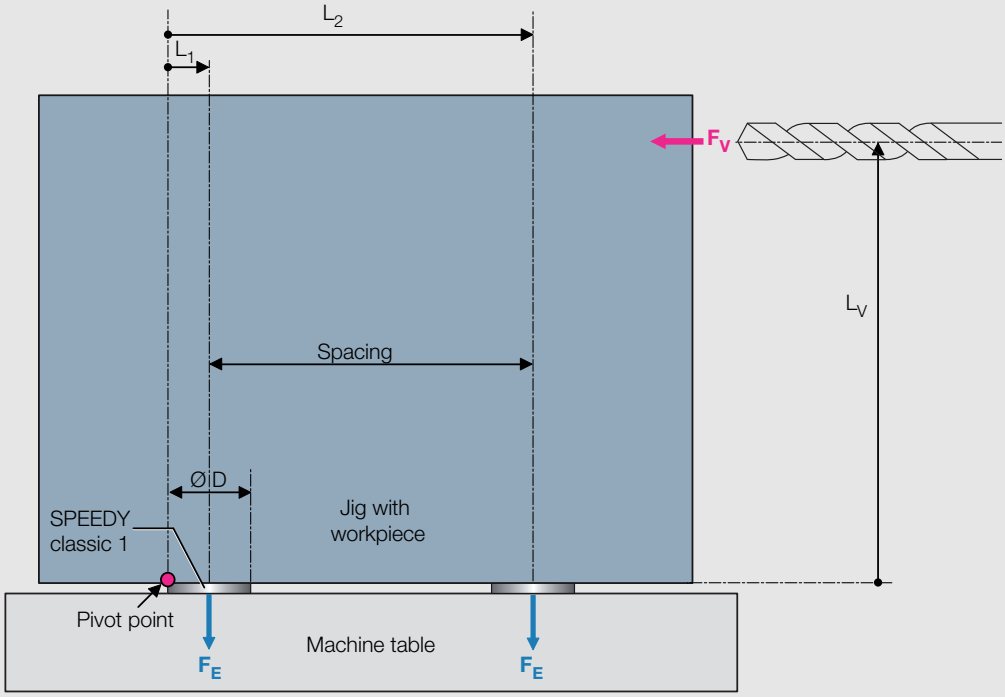

Solution:
$M_E > 2 \times M_V$?

$M_V = F_V \times L_V = 7.000\ N \times 0{,}4\ m$
$M_V =$ **2.800 Nm**
$M_E = 2 \times (F_E \times L_1) + 2 \times (F_E \times L_2)$
$M_E = 2 \times F_E \times (L_1 + L_2)$
$L_1 = ØD / 2$
$L_2 = ØD / 2 + Spacing$
$L_1 + L_2 = ØD + Spacing$
$L_1 + L_2 = 0{,}105\ m + 0{,}20\ m = 0{,}305\ m$
$M_E = 2 \times F_E \times (L_1 + L_2) = 2 \times 10.000\ N \times 0{,}305\ m$
$M_E =$ **6.100 Nm**

$M_E / M_V > 2$?
$M_E / M_V = 6.100\ Nm / 2.800\ N$
$M_E / M_V =$ **2,2 > 2**

With this design, safety by around a factor of two is provided.

(All dimensions to be entered in SI units (metres, Newtons))

M_V : Moment from feed force
M_E : Moment from insertion force
F_V : Feed force (7.000 N)
F_E : Insertion force (10.000 N)
Spacing = 200 mm = 0,20 m
Ø D: 105 mm = 0,105 m
L_V : 400 mm = 0,40 m

Technical data see page i.10 / for data sheets and 3D data see www.stark-inc.com

Stark Spannsysteme GmbH
A-6840 Götzis
Tel. +43 (0) 5523 64739-0
Fax +43 (0) 5523 64739-7
verkauf@stark-inc.com
www.stark-inc.com

Subject to modifications
WM-020-217-01-en

Flush Mount

1

For direct installation in machine pallets, plates, angles, cubes, mounting towers or swivelling yokes SPEEDY classic 1 Flush Mount is the proven zero point clamping system.

High quality tool steel ensures accuracy and robustness even under extreme conditions.

SPEEDY classic 1 Flush Mount has options for every application:

- Integrated media ducts
- Mount control (quality)
- Clamp check (safety)
- Optimised blow-out ducts
- Coolant drainage
- Modular structure
- Square shape for single mounting

The compact zero point mounting solution for the highest requirements:

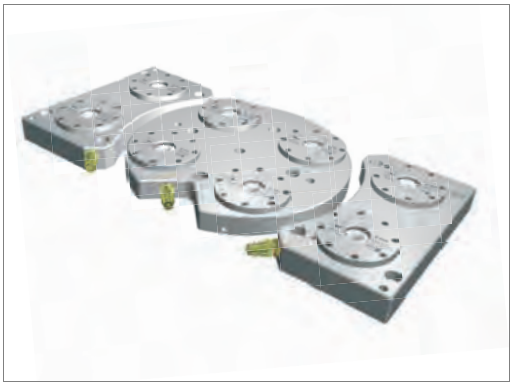

SPEEDY classic 1 fast closing clamps fitted in three separate plates, to increase the size of the working area on a 5-axis machine

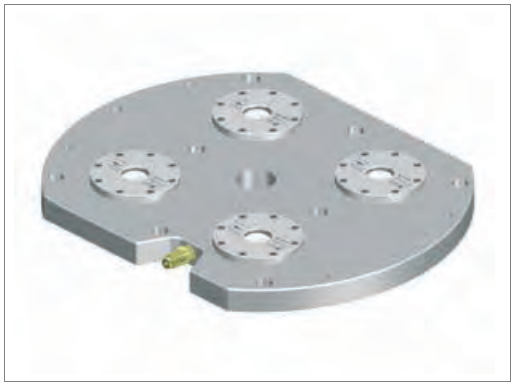

SPEEDY classic 1 fast closing clamps fitted in plate, with external hydraulic connection

SPEEDY classic 1 fast closing clamps fitted in round plate, hydraulic connection via rotary joint

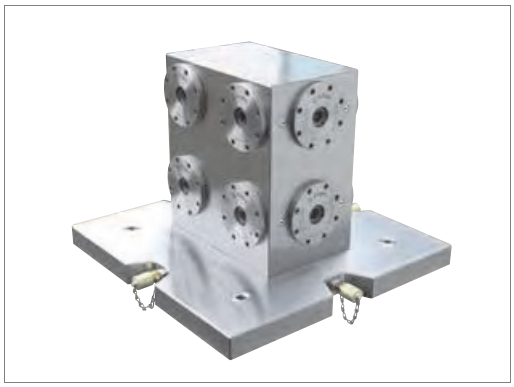

SPEEDY classic 1 fast closing clamps fitting in mounting tower

STANDARD

- Flush Mount
- Round

Characteristics:
Flush Mount fast closing clamp made of high quality tool steel.

Due to low height little space needed (can be installed even from plate thickness of 30 mm).

Is clamped mechanically and released hydraulically.

Application:
For flush mounting in machine pallets, plates, angles, cubes, towers and swivelling yokes.

Can be used for all common machining tasks such as milling, turning (note information in section “Clamp control valve” on page 6.9), grinding, eroding as well as on test stands for mounting devices.

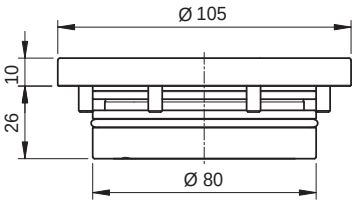

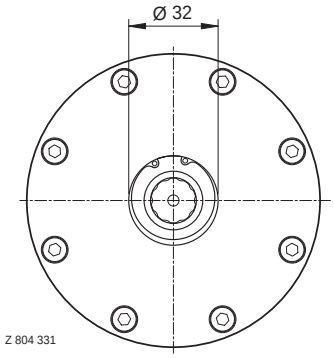

Order no.	Retention force	Insertion force	Hydr. pressure to release	Weight	Data sheet
804 331	25,000 N	6,700 N	35-40 bar	1.40 kg	D020, D032
804 348	25,000 N	10,000 N	75-80 bar	1.40 kg	D020, D032

Fastening screws included with the items supplied. For mounting and service accessories, see section 7.

Practical example

SPEEDY classic 1 STANDARD in customer-specific mounting tower with additional bores for weight optimisation.

For further information on mounting towers, see section 5.

Customer solution with SPEEDY classic 1, increased height mounting plate for optimal 5-side machining.

Technical data see page i.10 / for data sheets and 3D data see www.stark-inc.com

Stark Spannsysteme GmbH
A-6840 Götzis
Tel. +43 (0) 5523 64739-0
Fax +43 (0) 5523 64739-7
verkauf@stark-inc.com
www.stark-inc.com

Subject to modifications
WM-020-217-01-en

STANDARD

- Flush Mount
- Square

Characteristics:
Flush Mount fast closing clamp made of high quality tool steel.

Due to low height little space needed (can be installed even from plate thickness of 30 mm).

Is clamped mechanically and released hydraulically.

Due to the square shape the pallet is positioned and clamped in a specific orientation even on single mounting.

Application:
For single mounting, 5-axis machining and simple divisions. Can also be used mixed with round fast closing clamps.

For flush mounting in machine pallets, plates, angles, cubes, towers and swivelling yokes.

Can be used for all common machining tasks such as milling, turning (note information in section “Clamp control valve” on page 6.9), grinding, eroding as well as on test stands for mounting devices.

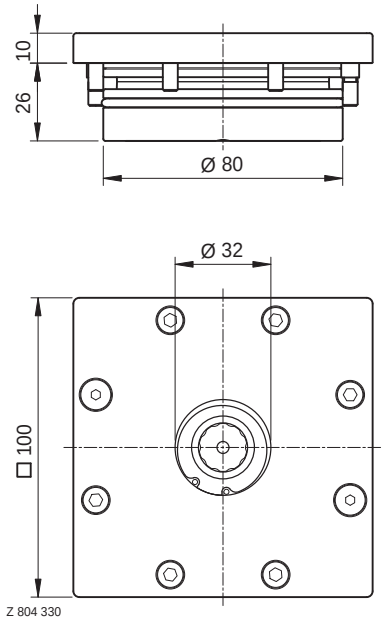

Order no.	Retention force	Insertion force	Hydr. pressure to release	Weight	Data sheet
804 330	25,000 N	6,700 N	35-40 bar	1.50 kg	D004
804 347	25,000 N	10,000 N	75-80 bar	1.50 kg	D004

Fastening screws and precision collar bolts included in the items supplied. For mounting and service accessories, see section 7.

Practical example

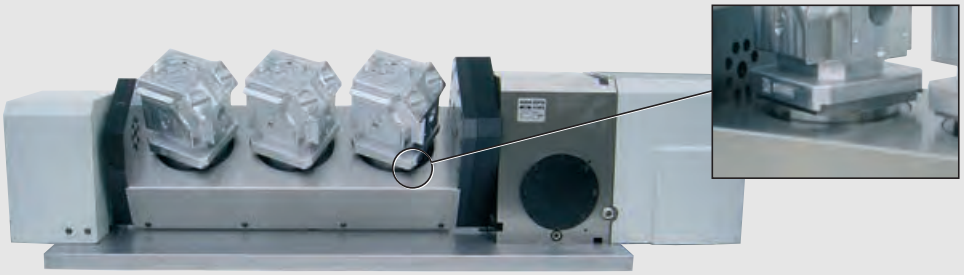

Square SPEEDY classic 1 STANDARD for single mounting (positioned secured against turning)

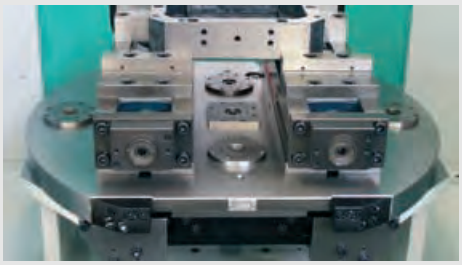

Stark Spannsysteme GmbH
A-6840 Götzis
Tel. +43 (0) 5523 64739-0
Fax +43 (0) 5523 64739-7
verkauf@stark-inc.com
www.stark-inc.com

Subject to modifications
WM-020-217-01-en

STANDARD

- Flush Mounting
- Round
- Media ducts

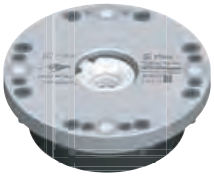

Characteristics:
Flush Mounting fast closing clamp made of high quality tool steel with media ducts.

Due to low height little space needed.

Is clamped mechanically and released hydraulically.

For all clamping situations in which hydraulics, pneumatics, emulsion or other media must be fed through the pallet.

Application:
For machining centres with media ducts on the machine table, for hydraulic and pneumatic clamping devices.

Can be combined as required with SPEEDY classic 1 without media ducts or square SPEEDY classic 1.

For flush mounting in machine pallets, plates, angles, cubes, towers and swivelling yokes.

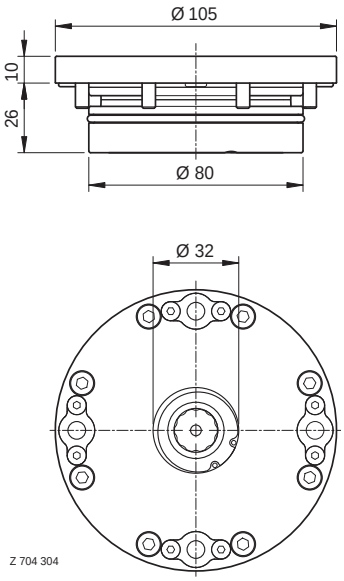

Order no.	Retention force	Insertion force	Pos. and number of the media ducts	Max. perm. pressure for media ducts	Weight	Data sheet no.
704 301	25,000 N	6,700 N	1	200 bar	1.40 kg	D020, D021, D032
704 302	25,000 N	6,700 N	2	200 bar	1.40 kg	D020, D021, D032
704 303	25,000 N	6,700 N	3	200 bar	1.40 kg	D020, D021, D032
704 304	25,000 N	6,700 N	4	200 bar	1.40 kg	D020, D021, D032
704 305	25,000 N	10,000 N	1	200 bar	1.40 kg	D020, D021, D032
704 306	25,000 N	10,000 N	2	200 bar	1.40 kg	D020, D021, D032
704 307	25,000 N	10,000 N	3	200 bar	1.40 kg	D020, D021, D032
704 308	25,000 N	10,000 N	4	200 bar	1.40 kg	D020, D021, D032

Fastening screws included with the items supplied. For mounting and service accessories, see section 7.

For detailed information on the media ducts, see section 6 "media ducts".

Application example

SPEEDY classic 1 with one media duct | SPEEDY classic 1 with two media ducts | SPEEDY classic 1 with three media ducts | SPEEDY classic 1 with four media ducts

1) Compressed air
2) Feed 1
3) Return 1
4) Feed 2
5) Return 2

Note:
The sum of the axial forces on the media ducts acts against the SPEEDY's insertion force. Note technical data on page 6.2.

Stark Spannsysteme GmbH
A-6840 Götzis
Tel. +43 (0) 5523 64739-0
Fax +43 (0) 5523 64739-7
verkauf@stark-inc.com
www.stark-inc.com

TORNADO

- Flush Mounting
- Round
- Raised supports
- Blow-out ducts

Characteristics:
Flush Mount fast closing clamp made of high quality tool steel with raised supports and blow-out ducts.

Due to low height little space needed.

Is clamped mechanically and released hydraulically.

Intelligent blow-out system for cleaning the raised supports (height approx. 0.3 mm) and the precision bore. Mount control via differential pressure, blocking air possible.

Application:
For flush mounting in machine pallets, plates, angles, cubes, swivelling yokes and mounting towers.

For partial automation, reduces the cleaning effort.

Can be used for all common machining tasks such as milling, turning (note information in section “Clamp control valve” on page 6.9), grinding, eroding as well as on test stands for mounting devices.

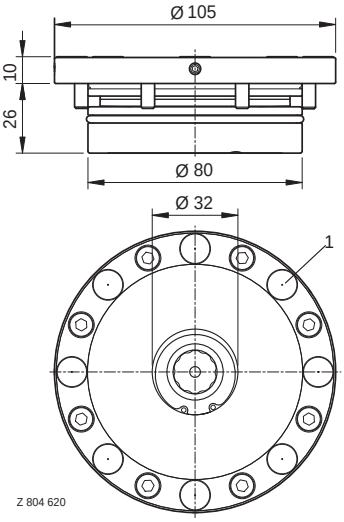

1) Raised supports with blow-out ducts

Order no.	Retention force	Insertion force	Hydr. pressure to release	Weight	Data sheet
804 620	25,000 N	6,700 N	35-40 bar	1.50 kg	D016
804 622	25,000 N	10,000 N	75-80 bar	1.50 kg	D016

Fastening screws included with the items supplied. For mounting and service accessories, see section 7.

TORNADO

- Flush Mount
- Square
- Raised supports
- Blow-out ducts

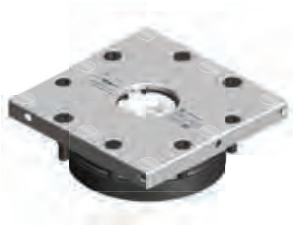

Characteristics:
Flush Mount fast closing clamp made of high quality tool steel with raised supports and blow-out ducts. Bearing surfaces are kept clean as protection against swarf.

Due to low height little space needed.

Is clamped mechanically and released hydraulically.

Intelligent blow-out system for cleaning the raised supports (height approx. 0.3 mm) and the precision bore. Mount control via differential pressure, blocking air possible.

Due to the square shape the pallet is positioned and clamped in a specific orientation even on single mounting.

Application:
For single mounting, 5-axis machining and simple divisions. Can also be used mixed with round fast closing clamps.

For partial automation, reduces the cleaning effort.

For flush mounting in machine pallets, plates, angles, cubes and swivelling yokes.

Can be used for all common machining tasks such as milling, turning (note information in section “Clamp control valve” on page 6.9), grinding, eroding as well as on test stands for mounting devices.

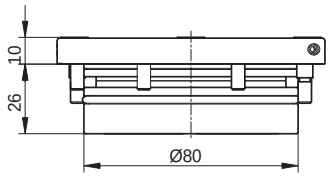

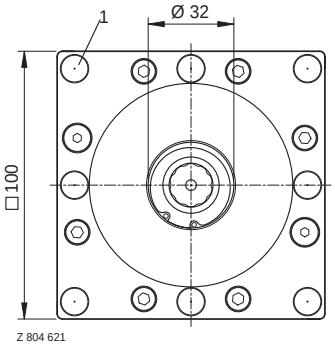

1) Raised supports with blow-out ducts

Order no.	Retention force	Insertion force	Hydr. pressure to release	Weight	Data sheet
804 621	25,000 N	6,700 N	35-40 bar	1.50 kg	D002
804 623	25,000 N	10,000 N	75-80 bar	1.50 kg	D002

Fastening screws and precision collar bolts included in the items supplied. For mounting and service accessories, see section 7.

Stark Spannsysteme GmbH
A-6840 Götzis
Tel. +43 (0) 5523 64739-0
Fax +43 (0) 5523 64739-7
verkauf@stark-inc.com
www.stark-inc.com

Subject to modifications
WM-020-217-01-en

TORNADO

- Flush Mount
- Round
- Raised supports
- Blow-out ducts
- Coolant drainage

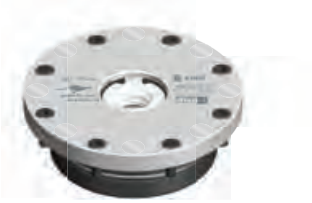

Characteristics:
Flush Mount fast closing clamp made of high quality tool steel with raised supports and blow-out ducts. Bearing surfaces are kept clean as protection against swarf.

Coolant drain through centre bore. Due to low height little space needed.

Is clamped mechanically and released hydraulically.

Intelligent blow-out system for cleaning the raised supports (height approx. 0.3 mm) and the precision bore. Mount control via differential pressure, blocking air possible.

Application:
For partial automation, reduces the cleaning effort.

For flush mounting in machine pallets, plates, angles, cubes and swivelling yokes.

Can be used for all common machining tasks such as milling, turning (note information in section "Clamp control valve" on page 6.9), grinding, eroding as well as on test stands for mounting devices.

Especially for vertical eroding machines, flushing the centre bore.

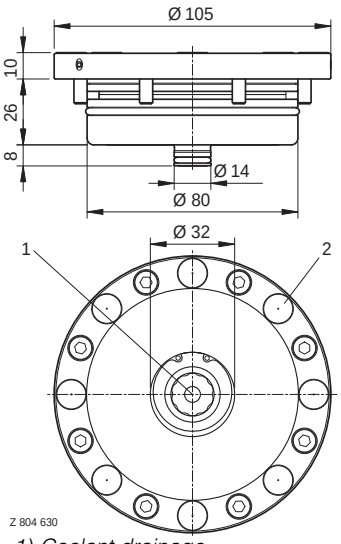

1) Coolant drainage
2) Raised supports with blow-out ducts

Order no.	Retention force	Insertion force	Hydr. pressure to release	Weight	Data sheet
804 630	25,000 N	6,700 N	35-40 bar	1.30 kg	D015
804 632	25,000 N	10,000 N	75-80 bar	1.30 kg	D015

Fastening screws included with the items supplied. For mounting and service accessories, see section 7.

TORNADO

- Flush Mount
- Square
- Raised supports
- Blow-out ducts
- Coolant drainage

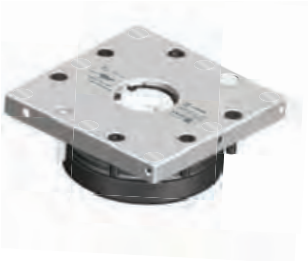

Characteristics:
Flush Mount fast closing clamp made of high quality tool steel with raised supports and blow-out ducts. Bearing surfaces are kept clean as protection against swarf.

Coolant drain through centre bore. Due to low height little space needed.

Is clamped mechanically and released hydraulically.

Intelligent blow-out system for cleaning the raised supports (height approx. 0.3 mm) and the precision bore. Mount control via differential pressure, blocking air possible.

Due to the square shape the pallet is clamped and positioned in a specific orientation even on single mounting.

Application:
For single mounting, 5-axis machining and simple divisions. Can also be mixed with round fast closing clamps.

For partial automation, reduces the cleaning effort.

For flush mounting in machine pallets, plates, angles, cubes and swivelling yokes.

Can be used for all common machining tasks such as milling, turning (note information in section "Clamp control valve" on page 6.9), grinding, eroding as well as on test stands for mounting devices.

Especially for vertical eroding machines, flushing the centre bore.

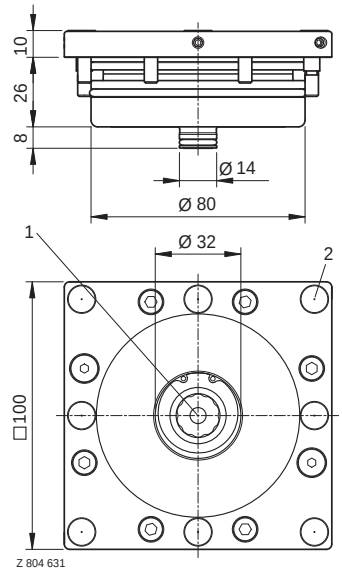

1) Coolant drainage
2) Raised supports with blow-out ducts

Order no.	Retention force	Insertion force	Hydr. pressure to release	Weight	Data sheet
804 631	25,000 N	6,700 N	35-40 bar	1.30 kg	D014
804 633	25,000 N	10,000 N	75-80 bar	1.30 kg	D014

Fastening screws and precision collar bolts included in the items supplied. For mounting and service accessories, see section 7.

Stark Spannsysteme GmbH
A-6840 Götzis
Tel. +43 (0) 5523 64739-0
Fax +43 (0) 5523 64739-7
verkauf@stark-inc.com
www.stark-inc.com
Subject to modifications
WM-020-217-01-en

TWISTER

- Flush Mount
- Round
- Raised supports
- Extending ducts
- Blow-out ducts
- Mount control

for AUTOMATION!

Characteristics:
Flush Mount fast closing clamp made of high quality tool steel with raised supports and blow-out ducts.

Due to low height little space needed.

Is clamped mechanically and released hydraulically.

Intelligent blow-out system for cleaning the raised supports and the precision bore. Mount control via differential pressure, blocking air possible.

Due to extending duct particularly effective cleaning of the raised supports. Due to 3 mm high raised supports, not possible to trap swarf.

Application:
For high accuracy during automatic loading.

For flush mounting in machine pallets, plates, angles, cubes and swivelling yokes.

Can be used for all common machining tasks such as milling, turning (note information in section “Clamp control valve” on page 6.9), grinding, eroding as well as on test stands for mounting devices.

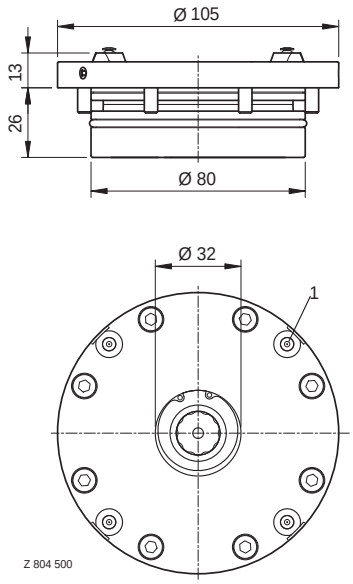

1) Raised supports with intelligent blow-out system

Order no.	Retention force	Insertion force	Hydr. pressure to release	Weight	Data sheet
804 500	25,000 N	6,700 N	35-40 bar	1.40 kg	D016 / D082

Fastening screws included with the items supplied. For mounting and service accessories, see section 7.

Practical example

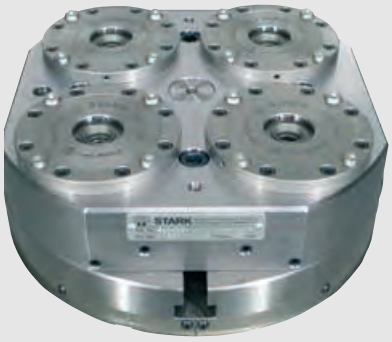

SPEEDY classic 1 TWISTER fitted in fast closing clamp plate

Stark Spannsysteme GmbH
A-6840 Götzis
Tel. +43 (0) 5523 64739-0
Fax +43 (0) 5523 64739-7
verkauf@stark-inc.com
www.stark-inc.com

STANDARD

- Module
- Round

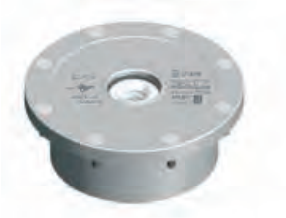

Characteristics:
Module made of high quality tool steel.

Is clamped mechanically and released hydraulically.

Application:
For flush mounting in machine pallets, plates, angles, cubes, towers and swivelling yokes.

If plates or machine pallets cannot be pressurised, the cylinders can be connected using pipework, pneumatic and hydraulic connection possible either via flange or through the base.

Simple installation in any position possible. Self-contained system, can also be used in through bores.

Can be used for all common machining tasks such as milling, turning (clamp control valve imperative, note information in section “Clamp control valve” on page 6.9), grinding, eroding as well as on test stands for mounting devices.

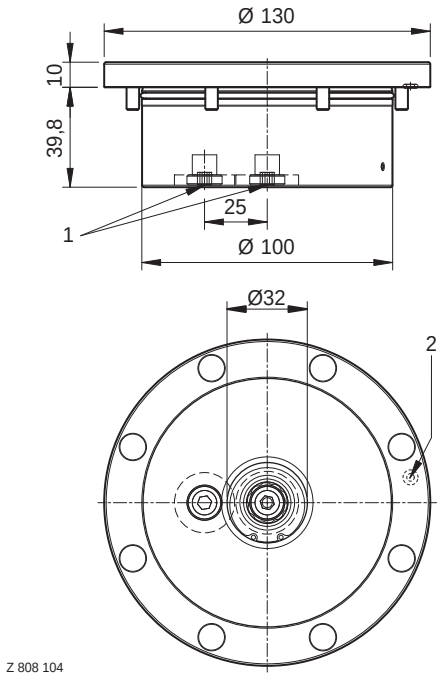

1) Base connection variant G1/8"
2) Flange connection variant

Order no.	Retention force	Insertion force	Hydr. pressure to release	Hydraulic connection	Weight	Data sheet
808 103	25,000 N	6,700 N	35-40 bar	Base	2.90 kg	D007
808 104	25,000 N	6,700 N	35-40 bar	Base + flange	2.90 kg	D007
808 106	25,000 N	10,000 N	75-80 bar	Base	2.90 kg	D007
808 107	25,000 N	10,000 N	75-80 bar	Base + flange	2.90 kg	D007

Fastening screws and screw covers included in the items supplied. For mounting and service accessories, see section 7.

Stark Spannsysteme GmbH
A-6840 Götzis
Tel. +43 (0) 5523 64739-0
Fax +43 (0) 5523 64739-7
verkauf@stark-inc.com
www.stark-inc.com
Subject to modifications
WM-020-217-01-en

TORNADO

- Module
- Round
- Raised supports
- Blow-out ducts

Characteristics:
Module made of high quality tool steel with raised supports and blow-out ducts.

Intelligent blow-out system for cleaning the raised supports (height approx. 0.3 mm) and the precision bore.

Is clamped mechanically and released hydraulically.

Application:
If plates or machine pallets cannot be sealed, the cylinders can be connected using pipework, pneumatic and hydraulic connection possible either via flange or through the base.

Simple installation in any position possible. Self-contained system, can also be used in through bores.

Can be used for all common machining tasks such as milling, turning (clamp control valve imperative, note information in section “Clamp control valve” on page 6.9), grinding, eroding as well as on test stands for mounting devices.

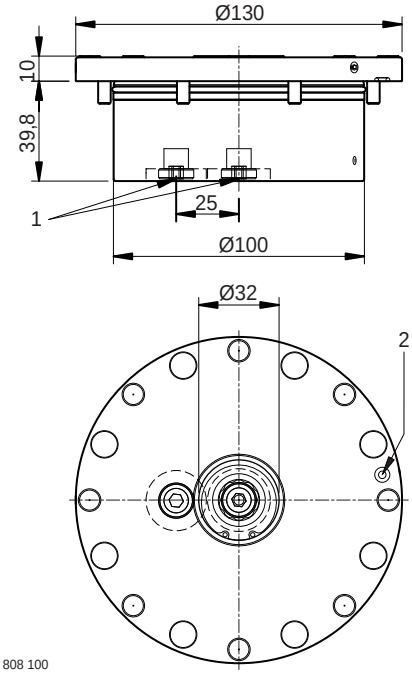

1) Base connection variant G1/8"
2) Flange connection variant

Order no.	Retention force	Insertion force	Hydr. pressure to release	Hydraulic connection	Air connection	Weight	Data sheet
808 100	25,000 N	6,700 N	35-40 bar	Base + flange	Flange	2.90 kg	D006
808 110	25,000 N	10,000 N	75-80 bar	Base + flange	Flange	2.90 kg	D006

Fastening screws and screw covers included in the items supplied. For mounting and service accessories, see section 7.

Sectional view

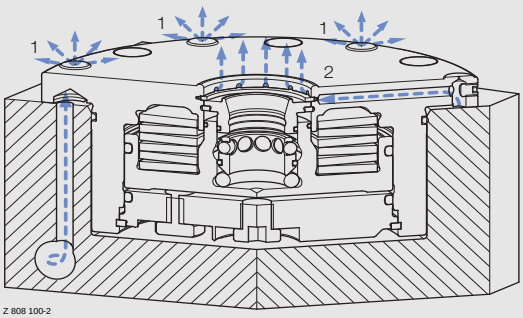

1) Raised support blow-out ducts
2) Centre blow-out ducts

Blowing out is performed directly at the bearing surfaces and at the precision diameter.

Detail view

Openings for centre blow-out ducts

Stark Spannsysteme GmbH
A-6840 Götzis
Tel. +43 (0) 5523 64739-0
Fax +43 (0) 5523 64739-7
verkauf@stark-inc.com
www.stark-inc.com

Subject to modifications
WM-020-217-01-en

COMPACT

- Flush Mount
- Round

Characteristics:
Flush Mount fast closing clamp made of high quality tool steel.

Due to small diameter, little space needed, very small spacing down to 70 mm possible.

Pneumatic and hydraulic connection possible either via flange or through the base.

Available with blow-out ducts and mount control.

Application:
For flush mounting in machine pallets, plates, angles, cubes and swivelling yokes.

Particularly suitable for direct workpiece clamping, very stiff clamping with small bearing surfaces.

Can be used for all common machining tasks such as milling, turning (note information in section "Clamp control valve" on page 6.9), grinding, eroding as well as on test stands for mounting devices.

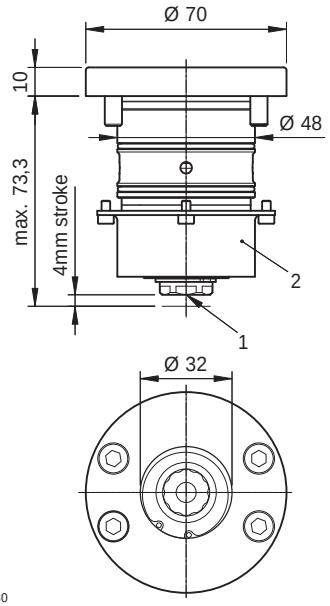

1) Hydraulic connection thread G1/8"
2) Sleeve not required for a blind bore (see data sheet D038)

Order no.	Retention force	Insertion force	Hydr. press. to release	Connection thread	Weight	Data sheet
801 030	25,000 N	6,500 N	175-180 bar	G 1/8	1.10 kg	D038

Fastening screws included with the items supplied. For mounting and service accessories, see section 7.

COMPACT

- Flush Mount
- Flattened

Characteristics:
Flush Mount fast closing clamp made of high quality tool steel.

Due to rectangular shape, little space needed, very small spacing down to 50 mm possible.

Pneumatic and hydraulic connection possible either via flange or through the base.

Available with blow-out ducts and mount control.

Application:
For flush mounting in machine pallets, plates, angles, cubes and swivelling yokes.

Particularly suitable for direct workpiece clamping, very stiff clamping with small bearing surfaces.

Can be used for all common machining tasks such as milling, turning (note information in section "Clamp control valve" on page 6.9), grinding, eroding as well as on test stands for mounting devices.

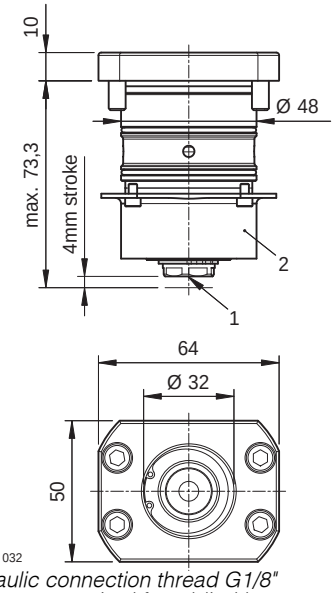

1) Hydraulic connection thread G1/8"
2) Sleeve not required for a blind bore (see data sheet D038)

Order no.	Retention force	Insertion force	Hydr. press. to release	Connection thread	Weight	Data sheet
801 032	25,000 N	6,500 N	175-180 bar	G 1/8	1.10 kg	D038

Fastening screws included with the items supplied. For mounting and service accessories, see section 7.

Stark Spannsysteme GmbH
A-6840 Götzis
Tel. +43 (0) 5523 64739-0
Fax +43 (0) 5523 64739-7
verkauf@stark-inc.com
www.stark-inc.com

Sectional view

Variant A:

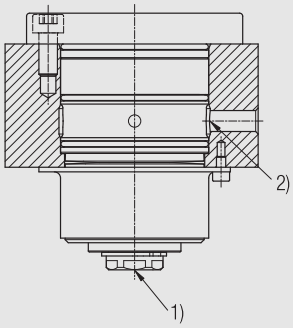

Variant B:

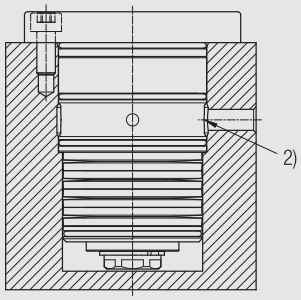

1) Hydraulic connection thread G1/8“
2) Hydraulic connection via deep bores

Practical example

SPEEDY Compact fast closing clamp plate (increased height version for best accessibility)

Stark Spannsysteme GmbH
A-6840 Götzis
Tel. +43 (0) 5523 64739-0
Fax +43 (0) 5523 64739-7
verkauf@stark-inc.com
www.stark-inc.com

Subject to modifications
WM-020-217-01-en

Set plates

The set plate 2 can be used on almost any machine table due to the slots and the sliding blocks with pins. Simple alignment is possible due to the precision bores.

The set plates 4, 6 and 8 include pre-centring features for fastening bores for 50, 63, 100 and 125 mm grid (see drawings below). If required these bores can also be made at STARK.

The set plates can thus be rapidly and precisely adjusted by the customer to the grid or T slot tables on any machine table.

Set plate 2

- Flush Mount

Order no.	Description		Pcs.	Dimension	Spacing	Weight
803 710	SET 2 A, comprising:			340 x 188	200	23.00 kg
	803 411	Hydraulic clamping pump	1			5.10 kg
	803 700	Set plate 2, incl. 804 348	1			11.60 kg
	804 226	Zero point nipple	4			0.07 kg
	804 254	Retractable nipple key	1			0.08 kg
803 711	SET 2 B (expansion set for SET 2 A, however also with 2 swivel screw connectors and brass pipe for 200 spacing, without hydraulic clamping pump)					

For further information see brochure WM-020-111. Fastening screws and washers included in the items supplied. For mounting and service accessories, see section 7.

Set plate 4

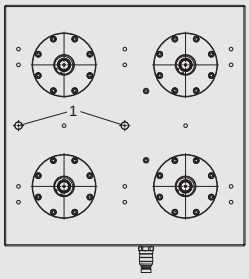

Symbol photo

Set plate 6

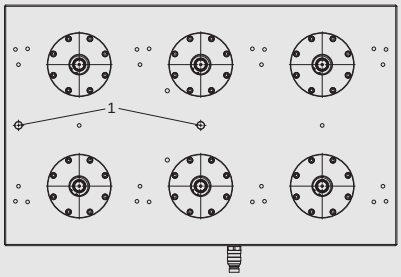

Set plate 8

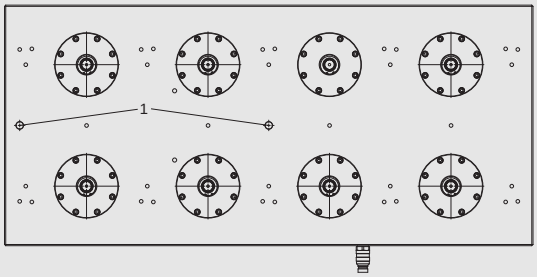

1) Two alignment bores Ø12 H7 for positioning the plates. Drill bores for screws DIN 912, e.g. M12 at pre-centred position to suit slot spacing or grid

Stark Spannsysteme GmbH
A-6840 Götzis
Tel. +43 (0) 5523 64739-0
Fax +43 (0) 5523 64739-7
verkauf@stark-inc.com
www.stark-inc.com

Set plate 4

• Flush Mount

Order no.	Description		Pcs.	Dimension	Spacing	Weight	Data sheet
804 700	SET 4 A, comprising:			396 x 396	200	40 kg	D084
	804 411	Pressure booster	1			8.80 kg	
		Set plate 4, incl. 804 331	1				
	804 226	Zero point nipple	8			0.07 kg	
	804 254	Retractable nipple key	1			0.07 kg	
804 701	SET 4 B (as for SET 4 A, however without pressure booster)						D084

Set plate 6

• Flush Mount

Order no.	Description		Pcs.	Dimension	Spacing	Weight	Data sheet
804 710	SET 6 A, comprising:			646 x 396	200	60 kg	D084
	804 411	Pressure booster	1			8.80 kg	
		Set plate 6, incl. 804 331	1				
	804 226	Zero point nipple	12			0.07 kg	
	804 254	Retractable nipple key	1			0.07 kg	
804 711	SET 6 B (as for SET 6 A, however without pressure booster)						D084

Set plate 8

• Flush Mount

Order no.	Description		Pcs.	Dimension	Spacing	Weight	Data sheet
804 720	SET 8 A, comprising:			870 x 396	200	80 kg	D084
	804 411	Pressure booster	1			8.80 kg	
		Set plate 8, incl. 804 331	1				
	804 226	Zero point nipple	16			0.07 kg	
	804 254	Retractable nipple key	1			0.08 kg	
804 721	SET 8 B (as for SET 8 A, however without pressure booster)						D084

Sliding block with pin

Characteristics:
Sliding block with pin

Application:
For positioning in the T slots.

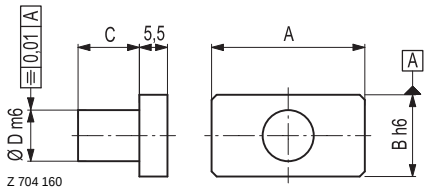

Order no.	A	B	C	D
704 160	20	12	9	6
704 161	30	14	12	10
704 162	40	14	15	12
704 163	50	18	19	16

Order no.	A	B	C	D
704 164	20	14	9	6
704 165	30	20	15	10
704 166	30	20	18	12
704 167	30	20	24	16

Technical data see page i.10 / for data sheets and 3D data see www.stark-inc.com

Stark Spannsysteme GmbH
A-6840 Götzis
Tel. +43 (0) 5523 64739-0
Fax +43 (0) 5523 64739-7
verkauf@stark-inc.com
www.stark-inc.com

Subject to modifications
WM-020-217-01-en

Surface Mount

2

SPEEDY classic 1 Surface Mount is the zero point clamping system that fits on every machine.

With SPEEDY classic 1 Surface Mount you can optimise your older machinery and increase your productivity without major investment.

Due to its low weight, the effect on dynamic movements on the machine table is minimal.

Upgrade now – it is never too late for a zero clamping system!

Every production machine deserves to have its own SPEEDY zero point clamping system:

SPEEDY classic 1 fast closing clamp fitted to a round plate with pipework

SPEEDY classic 1 fast closing clamp fitted to mounting tower with pipework, protected by cover plate

SPEEDY classic 1 fast closing clamp fitted to each side of a mounting tower with pipework, protected by cover plate (one side without cover plate so that the pipework can be seen)

SPEEDY classic 1 fast closing clamp fitted to each side of the mounting tower with pipework, protected by cover plate

STANDARD

- Surface Mount
- Round

Characteristics:
Surface Mount fast closing clamp made of high quality tool steel. Is clamped mechanically and released hydraulically.

Variable spacing on usage of hydraulic hoses.

In comparison to a fast closing clamp plate, low machine table load.

Application:
For surface mounting on machine pallets, plates, angles, cubes, towers and swivelling yokes.

Can be used for all common machining tasks such as milling, turning, grinding, eroding as well as on test stands for mounting devices.

Optional with centring shank for centring on a perforated plate.

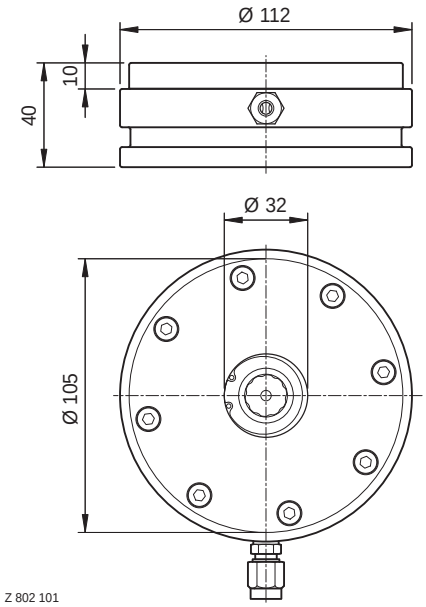

Order no.	Retention force	Insertion force	Hydr. pressure to release	Weight
802 101	25,000 N	6,700 N	35-40 bar	2.50 kg
802 102	25,000 N	10,000 N	75-80 bar	2.50 kg

Hydraulic fitting Ø6 1/8" included with the items supplied.

STANDARD

- Surface Mount
- Square

Characteristics:
Surface Mount fast closing clamp made of high quality tool steel. Is clamped mechanically and released hydraulically.

Due to the square shape the pallet is positioned in a specific orientation even on single mounting.

Variable spacing on usage of hydraulic hoses.

In comparison to a fast closing clamp plate, low machine table load.

Application:
For surface mounting on machine pallets, plates, angles, cubes, towers and swivelling yokes.

Can be used for all common machining tasks such as milling, turning, grinding, eroding as well as on test stands for mounting devices.

For single mounting and simple divisions. Can also be used mixed with round fast closing clamps.

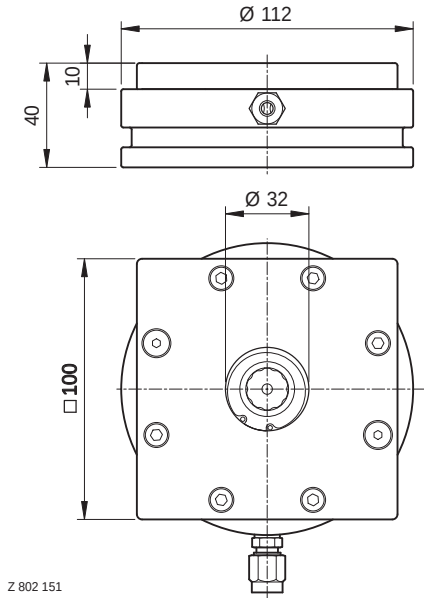

Order no.	Retention force	Insertion force	Hydr. pressure to release	Weight
802 151	25,000 N	6,700 N	35-40 bar	2.50 kg
802 152	25,000 N	10,000 N	75-80 bar	2.50 kg

Hydraulic fitting Ø6 1/8" included with the items supplied.

Technical data see page i.10 / for data sheets and 3D data see www.stark-inc.com

Stark Spannsysteme GmbH
A-6840 Götzis
Tel. +43 (0) 5523 64739-0
Fax +43 (0) 5523 64739-7
verkauf@stark-inc.com
www.stark-inc.com

Subject to modifications
WM-020-217-01-en

STANDARD

- Surface Mount
- Round
- Centring shank

Characteristics:
Surface Mount fast closing clamp made of high quality tool steel. Is clamped mechanically and released hydraulically.

Variable spacing on usage of hydraulic hoses.

Centring shank with fit for precise positioning.

In comparison to a fast closing clamp plate, low machine table load.

Application:
For surface mounting on machine pallets, plates, angles, cubes, towers and swivelling yokes.

Can be used for all common machining tasks such as milling, turning, grinding, eroding as well as on test stands for mounting devices.

Optional with centring shank for centring on a perforated plate.

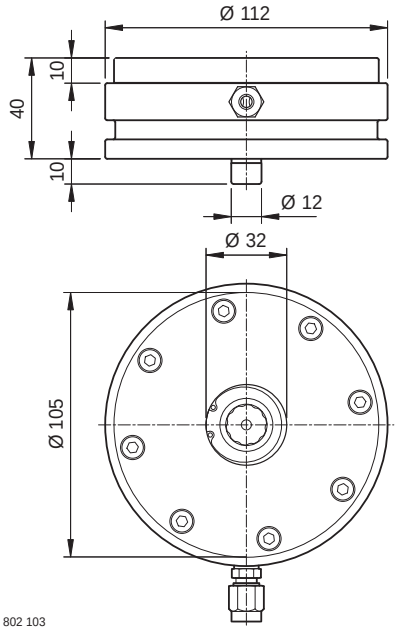

Order no.	Retention force	Insertion force	Hydr. pressure to release	Weight
802 103	25,000 N	6,700 N	35-40 bar	2.50 kg
802 104	25,000 N	10,000 N	75-80 bar	2.50 kg

Hydraulic fitting Ø6 1/8" included with the items supplied.

STANDARD

- Surface Mount
- Square
- Centring shank

Characteristics:
Surface Mount fast closing clamp made of high quality tool steel. Is clamped mechanically and released hydraulically.

Due to the square shape the pallet is positioned in a specific orientation even on single mounting.

Variable spacing on usage of hydraulic hoses.

Centring shank with fit for precise positioning.

In comparison to a fast closing clamp plate, low machine table load.

Application:
For surface mounting on machine pallets, plates, angles, cubes, towers and swivelling yokes.

Can be used for all common machining tasks such as milling, turning, grinding, eroding as well as on test stands for mounting devices.

For single mounting and simple divisions. Can also be used mixed with round fast closing clamps.

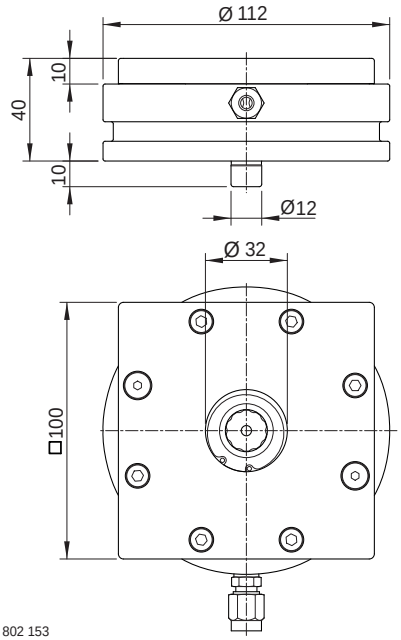

Order no.	Retention force	Insertion force	Hydr. pressure to release	Weight
802 153	25,000 N	6,700 N	35-40 bar	2.50 kg
802 154	25,000 N	10,000 N	75-80 bar	2.50 kg

Hydraulic fitting Ø6 1/8" included with the items supplied.

Stark Spannsysteme GmbH
A-6840 Götzis
Tel. +43 (0) 5523 64739-0
Fax +43 (0) 5523 64739-7
verkauf@stark-inc.com
www.stark-inc.com

Subject to modifications
WM-020-217-01-en

SET 4

• Surface Mount

Order no.	Description	Pcs.	Spacing *	Weight
802 110	SET 4 A, comprising:		200	
	804 411 Pressure booster	1		8.80 kg
	802 101 Fast closing clamp SPEEDY classic 1Insertion force 6.700 N	4		2.50 kg
	804 354 Fixing clamp	8		0.50 kg
	804 226 Retractable nipple	8		0.13 kg
	804 370 Connection block	1		0.20 kg
	804 254 Retractable nipple key	1		0.08 kg
802 111	SET 4 B (as for set A, however without pressure booster)		200	

* Incl. pipework and fittings for 200 spacing, additional pipes and fittings are available for other configurations (see from page 2.11)

Practical example

SET 4 systems with hydraulic pipework

SET 6

• Surface Mount

Order no.	Description	Pcs.	Spacing *	Weight
802 112	SET 6 A, comprising:		200	
	804 411 Pressure booster	1		8.80 kg
	802 101 Fast closing clamp SPEEDY classic 1Insertion force 6.700 N	6		2.50 kg
	804 354 Fixing clamp	12		0.50 kg
	804 226 Retractable nipple	12		0.13 kg
	804 370 Connection block	1		0.20 kg
	804 254 Retractable nipple key	1		0.08 kg
802 113	SET 6 B (as for set A, however without pressure booster)		200	

* Incl. pipework and fittings for 200 spacing, additional pipes and fittings are available for other configurations (see from page 2.11)

Stark Spannsysteme GmbH
A-6840 Götzis
Tel. +43 (0) 5523 64739-0
Fax +43 (0) 5523 64739-7
verkauf@stark-inc.com
www.stark-inc.com
Subject to modifications
WM-020-217-01-en

VARIO – the adjustable fast clamping system

- VARIO can be adjusted in several axes – the position of the nipple fastenings on the workpiece can be chosen as required.
- Almost all SPEEDY modules with a very wide range of insertion forces can be used.
- Due to the continuous position adjustment, VARIO is optimally suited to small batch, series production and prototype manufacture.
- Different spacings can be set in a very short time.
- VARIO is insensitive to chips due to a protective cover.

Practical example

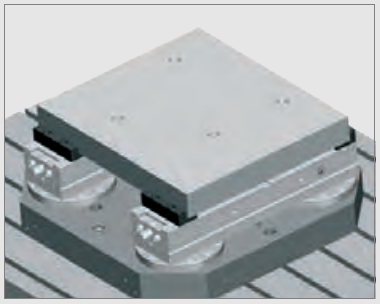

1) Workpiece fixed in position
2) Preparation of the fastening bores for retractable nipples

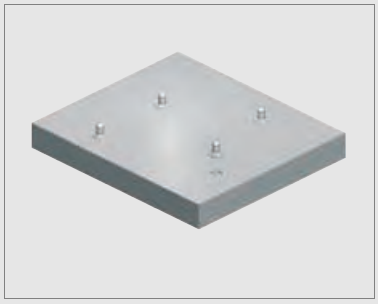

1) Fastening of the retractable nipples to the workpiece

1) Rotation of the workpiece by 180°
2) Clamping of the workpiece on 4 SPEEDY VARIOKIT fast closing clamps

VARIOGRIP – Direct clamping without retractable nipples

- VARIOGRIP is a surface mount set including expanding jig pins and is used to expand the VARIO fast clamping system.
- VARIOGRIP makes it possible to directly clamp your workpiece without retractable nipples. The expanding jig pins are inserted in the existing bores on the workpiece.
- VARIOGRIP is activated by the insertion force of the VARIO fast closing clamps.

Practical example

Technical data see page i.10 / for data sheets and 3D data see www.stark-inc.com

Stark Spannsysteme GmbH
A-6840 Götzis
Tel. +43 (0) 5523 64739-0
Fax +43 (0) 5523 64739-7
verkauf@stark-inc.com
www.stark-inc.com

Subject to modifications
WM-020-217-01-en

VARIO COMPACT

- Surface Mount
- Round
- Variable

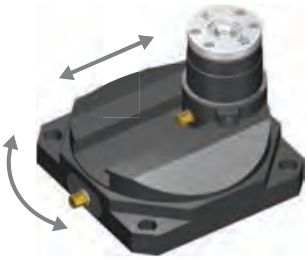

Characteristics:
Zero point clamping system that can be adjusted in two axes.

Position of the nipple fastenings on the workpiece can be chosen as required.

Compact design makes possible close spacings.

Ideal for 5-sided machining due to the increased height.

Variable clamping pressure, depending on SPEEDY variants used.

Application:
Optimally suited to flexible small batch, series production and prototype manufacture with zero point clamping.

For surface mounting on machine pallets, plates, angles, cubes, towers and swivelling yokes.

Can be used for all common machining tasks such as milling, grinding, eroding as well as on test stands for mounting devices.

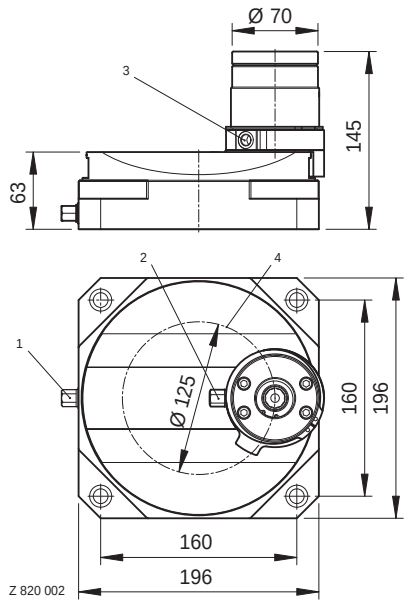

1) Tightening torque rotary clamping: max. 80 Nm
2) Tightening torque linear clamping: max. 25 Nm
3) Connection for hydraulic hose
4) Adjustment range

Order no.	Retention force	Insertion force	Hydr. pressure to release	Weight
820 002	25,000 N	6,500 N	175-180 bar	16.60 kg

VARIO STANDARD

- Surface Mount
- Round
- Variable

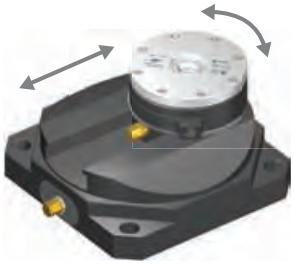

Characteristics:
Zero point clamping system that can be adjusted in two axes.

Position of the nipple fastenings on the workpiece can be chosen as required.

The machine compartment can be optimally utilised due to the low shape.

Variable clamping pressure, depending on SPEEDY variants used.

Application:
Optimally suited to flexible small batch, series production and prototype manufacture with zero point clamping.

For surface mounting on machine pallets, plates, angles, cubes, towers and swivelling yokes.

Can be used for all common machining tasks such as milling, grinding, eroding as well as on test stands for mounting devices.

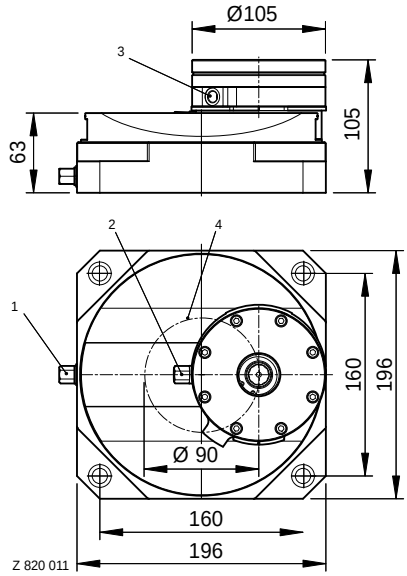

1) Tightening torque rotary clamping: max. 80 Nm
2) Tightening torque linear clamping: max. 25 Nm
3) Connection for hydraulic hose
4) Adjustment range

Order no.	Retention force	Insertion force	Hydr. pressure to release	Weight
820 011	25,000 N	6,700 N	35-40 bar	16.60 kg
820 012	25,000 N	10,000 N	75-80 bar	16.60 kg

Technical data see page i.10 / for data sheets and 3D data see www.stark-inc.com

Stark Spannsysteme GmbH
A-6840 Götzis
Tel. +43 (0) 5523 64739-0
Fax +43 (0) 5523 64739-7
verkauf@stark-inc.com
www.stark-inc.com

Subject to modifications
WM-020-217-01-en

VARIOGRIP COMPACT

Characteristics:
Expanding jig pin for direct workpiece clamping in bores without retractable nipples.

Other expanding jig pin diameters and versions on request.

Application:
For surface mounting on the fast clamping system VARIO COMPACT.

Optimally suited to flexible small batch, series production and prototype manufacture with zero point clamping.

Can be used for all common machining tasks such as milling, grinding, eroding as well as on test stands for mounting devices.

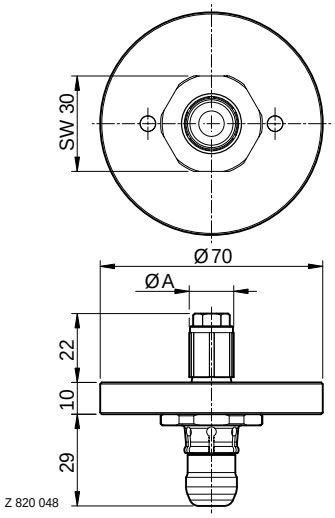

Order no.	Expanding jig pins ØA**	Retention force*	Version**	suitable for	Weight
820 048	14 mm	0.6-5.5 kN	Smooth	VARIO COMPACT	1.80 kg
820 049	18 mm	0.6-5.5 kN	Smooth	VARIO COMPACT	1.80 kg
820 050	20 mm	0.6-5.5 kN	Smooth	VARIO COMPACT	1.80 kg

* Is dependent on the version of expanding jig pin (with smooth version only the minimum force can be achieved)

** Other versions and diameters/lengths on request

VARIOGRIP STANDARD

Characteristics:
Expanding jig pin for direct workpiece clamping in bores without retractable nipples.

Other expanding jig pin diameters and versions on request.

Application:
For surface mounting on the fast clamping system VARIO STANDARD.

Optimally suited to flexible small batch, series production and prototype manufacture with zero point clamping.

Can be used for all common machining tasks such as milling, grinding, eroding as well as on test stands for mounting devices.

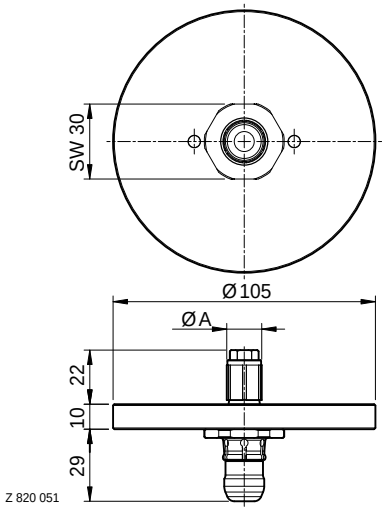

Order no.	Expanding jig pins ØA**	Retention force*	Version**	suitable for	Weight
820 051	14 mm	1.2-10 kN	Smooth	VARIO STANDARD	1.80 kg
820 052	18 mm	1.2-10 kN	Smooth	VARIO STANDARD	1.80 kg
820 053	20 mm	1.2-10 kN	Smooth	VARIO STANDARD	1.80 kg

* Is dependent on the version of expanding jig pin and the insertion force of the SPEEDY (6.7 kN or 10 kN) (with the smooth version only the minimum force can be achieved)

** Other versions and diameters/lengths on request

Stark Spannsysteme GmbH
A-6840 Götzis
Tel. +43 (0) 5523 64739-0
Fax +43 (0) 5523 64739-7
verkauf@stark-inc.com
www.stark-inc.com

Subject to modifications
WM-020-217-01-en

Fixing clamps for fastening the fast closing clamps

For fastening the fast closing clamps to the machine table, a range of three fixing clamps is available, these items can be combined as required.

Possible combinations:
Due to the special shapes of the fixing clamps, it possible to fasten the fast closing clamps to any commonly available T groove table or perforated plates without problems.

Note:
Only stably fastened fast clamping cylinders can withstand the forces given. Pay attention to operating instructions!

For optimal fastening, three to four fastening screws are to be used per fast closing clamp.

Application example

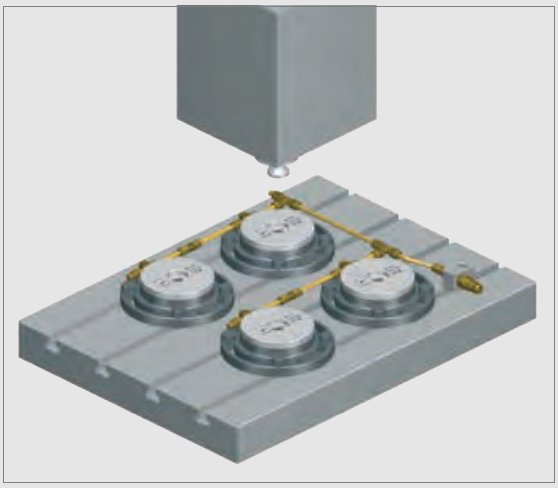

Position fast closing clamps and fasten using the fixing clamps.

Pay attention to symmetrical fastening. If possible, fasten fast closing clamps diagonally across the middle.

Pay attention to operating instructions.

Technical data see page i.10 / for data sheets and 3D data see www.stark-inc.com

Stark Spannsysteme GmbH
A-6840 Götzis
Tel. +43 (0) 5523 64739-0
Fax +43 (0) 5523 64739-7
verkauf@stark-inc.com
www.stark-inc.com

Subject to modifications
WM-020-217-01-en

Fixing clamp 1

Characteristics:
Fixing clamp for fastening the Surface Mount fast closing clamps.

Application:
For fastening SPEEDY classic 1 Surface Mount fast closing clamp.

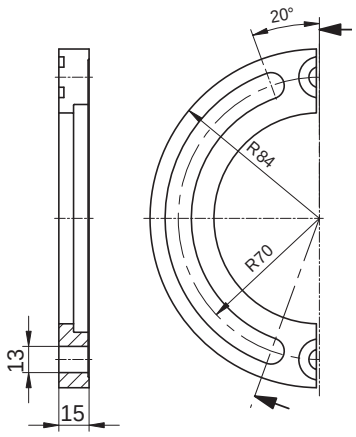

Z 804 354

Order no.	Description	Weight
804 354	Fixing clamp form 1 for SPEEDY classic 1	0.50 kg

Fixing clamp 2

Characteristics:
Fixing clamp for fastening the Surface Mount fast closing clamps.

Application:
For fastening SPEEDY classic 1 Surface Mount fast closing clamp.

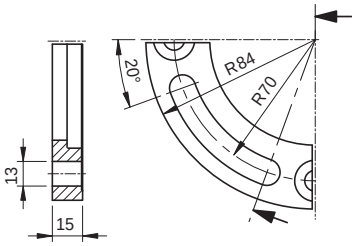

Z 804 355

Order no.	Description	Weight
804 355	Fixing clamp form 2 for SPEEDY classic 1	0.25 kg

Fixing clamp 3

Characteristics:
Fixing clamp for fastening the Surface Mount fast closing clamps.

Application:
For fastening SPEEDY classic 1 Surface Mount fast closing clamp.

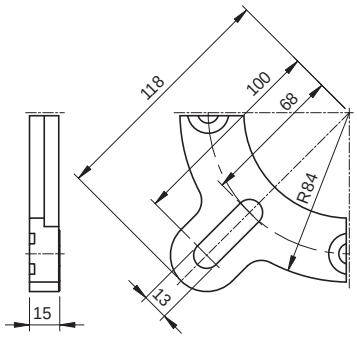

Z 804 356

Order no.	Description	Weight
804 356	Fixing clamp form 3 for SPEEDY classic 1	0.25 kg

Stark Spannsysteme GmbH
A-6840 Götzis
Tel. +43 (0) 5523 64739-0
Fax +43 (0) 5523 64739-7
verkauf@stark-inc.com
www.stark-inc.com
Subject to modifications
WM-020-217-01-en

Fastening kit

Characteristics:
Fastening kit for fixing clamps.

Application:
For fastening the fixing clamps in T grooves.

Order no.	Description	Weight
931 059	Fastening screw M12x40 DIN 912	
938 023	Washer M12 DIN 125 A	
955 103	Groove nut M12×14 DIN 508	0.10 kg

Connecting ring

Characteristics:
Connecting ring for fixing clamps.

Application:
For connecting the fixing clamps together.

Order no.	Description	Weight
938 006	Connecting ring M10 DIN 125 A	0.01 kg

Positioning nipple

Characteristics:
Positioning nipple for mounting in a collet.

Application:
For quick, accurate positioning of the SPEEDY classic 1 fast closing clamps.

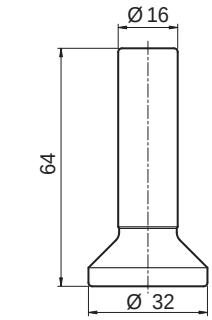

Z 804 259

Order no.	Description	Weight
804 259	Positioning nipple for SPEEDY classic 1	0.20 kg

Application example

Positioning example based on a SPEEDY set plate 2

Stark Spannsysteme GmbH
A-6840 Götzis
Tel. +43 (0) 5523 64739-0
Fax +43 (0) 5523 64739-7
verkauf@stark-inc.com
www.stark-inc.com
Subject to modifications
WM-020-217-01-en

Hydraulic coupler

- SPEEDY side
- Self-sealing

Characteristics:
Self-sealing coupler

Application:
Coupling for fast closing clamp plates or connection block for pipework for the SPEEDY classic 1 Surface Mount fast closing clamps.

Particularly recommended for use in conjunction with pressure boosters (it is not necessary to re-fill the pressure booster).

Can be used wherever escaping oil must not enter the drilling emulsion and the coupling is frequently used.

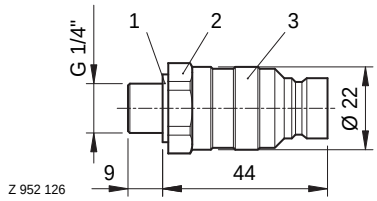

1) Sealing washer
2) AF 22
3) Coupling

Order no.	Description	Max. pressure	Weight
952 126	Hydraulic coupler	300 bar	0.10 kg

Connection block with hydraulic coupler

- Self-sealing

Characteristics:
Connection block for hydraulic pipework.

Application:
Connection block for pipework for SPEEDY classic 1 Surface Mount fast closing systems.

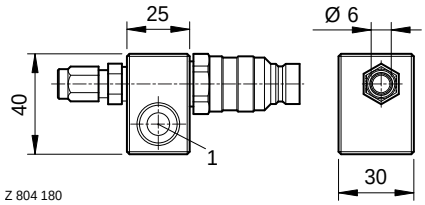

1) Fastening bore for M8 / DIN912

Order no.	Description	Max. pressure	Weight
804 180	Connection block for pipework, with self-sealing coupling, suitable for SPEEDY classic 1	100 bar	0.20 kg

Protective cap for hydraulic coupler included in the items supplied.

Hydraulic coupler

- Hose side
- Self-sealing

Characteristics:
Self-sealing hydraulic coupler for hydraulic pipework.

Application:
Self-sealing hydraulic coupler for hydraulic pipework for SPEEDY classic 1 Surface Mount fast closing clamps.

Order no.	Description	Max. pressure	Weight
952 177	Self-sealing hydraulic coupler for hydraulic pipework for SPEEDY classic 1, inside thread G1/4"	300 bar	0.20 kg

Stark Spannsysteme GmbH
A-6840 Götzis
Tel. +43 (0) 5523 64739-0
Fax +43 (0) 5523 64739-7
verkauf@stark-inc.com
www.stark-inc.com

Subject to modifications
WM-020-217-01-en

Hydraulic coupler

- SPEEDY side

Characteristics:
Coupler for connection block for hydraulic pipework.

Application:
Coupling for fast closing clamp plates or connection block for pipework for the SPEEDY classic 1 Surface Mount fast closing clamps.

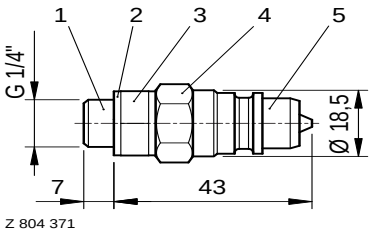

1) Double nipple
2) Sealing washer
3) AF 18
4) AF 19
5) Coupling

Order no.	Description	Max. pressure	Weight
804 371	Hydraulic coupler	700 bar	
804 372	Steel double nipple	500 bar	
804 395	Aluminium protective cap		0.10 kg

Connection block

- Can be screwed in place

Characteristics:
Connection block for hydraulic pipework.

Application:
Connection block for pipework for SPEEDY classic 1 Surface Mount fast closing systems.

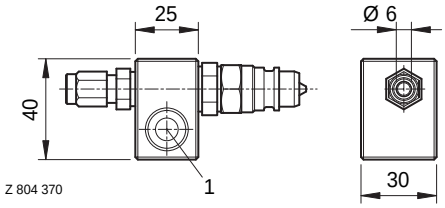

1) Fastening bore for M8 / DIN912

Order no.	Description	Max. pressure	Weight
804 370	Connection block for pipework suitable for SPEEDY classic 1	100 bar	0.20 kg

Protective cap for hydraulic coupler included in the items supplied.

Hydraulic coupler

- Hose side

Characteristics:
Hydraulic coupler for hydraulic pipework.

Application:
Hydraulic coupler for hydraulic pipework for SPEEDY classic 1 Surface Mount fast closing clamps.

Order no.	Description	Max. pressure	Weight
952 044	Hydraulic coupler for hydraulic pipework for SPEEDY classic 1, inside thread G1/4"	700 bar	0.20 kg

Technical data see page i.10 / for data sheets and 3D data see www.stark-inc.com
Stark Spannsysteme GmbH
A-6840 Götzis
Tel. +43 (0) 5523 64739-0
Fax +43 (0) 5523 64739-7
verkauf@stark-inc.com
www.stark-inc.com
Subject to modifications
WM-020-217-01-en

Fitting with male nipple

Characteristics:
Fitting with male nipple made of brass.

Application:
Fitting for SPEEDY classic 1 Surface Mount fast closing clamps.

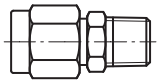
Z 804 374

Order no.	Description	Max. pressure	Weight
804 374	SO 41121-8-1/4" with reduced brass clamping ring Ø 6	100 bar	
804 375	SO 41121-6-1/8"	100 bar	0.26 kg

Straight fitting

Characteristics:
Straight fitting made of brass.

Application:
Fitting for pipework for SPEEDY classic 1 Surface Mount fast closing clamps.

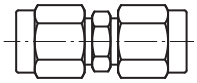
Z 804 379

Order no.	Description	Max. pressure	Weight
804 379	SO 41021-8 with reduced brass clamping ring Ø 6	100 bar	0.35 kg

Elbow fitting

Characteristics:
Elbow fitting made of brass.

Application:
Elbow fitting for pipework for SPEEDY classic 1 Surface Mount fast closing clamps.

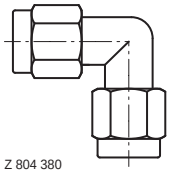
Z 804 380

Order no.	Description	Max. pressure	Weight
804 380	SO 42021-8 with reduced brass clamping ring Ø 6	100 bar	0.04 kg

T-fitting

Characteristics:
T-fitting made of brass.

Application:
T-fitting for pipework for SPEEDY classic 1 Surface Mount fast closing clamps.

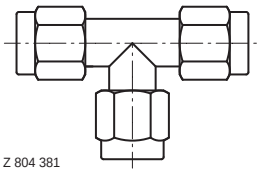
Z 804 381

Order no.	Description	Max. pressure	Weight
804 381	SO 43021-8 with reduced brass clamping ring Ø 6	100 bar	0.05 kg

Technical data see page i.10 / for data sheets and 3D data see www.stark-inc.com

Stark Spannsysteme GmbH
A-6840 Götzis
Tel. +43 (0) 5523 64739-0
Fax +43 (0) 5523 64739-7
verkauf@stark-inc.com
www.stark-inc.com

Subject to modifications
WM-020-217-01-en

Cross fitting

Characteristics:
Cross piece made of brass.

Application:
Cross fitting for pipework for SPEEDY classic 1 Surface Mount fast closing clamps.

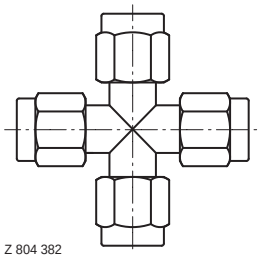

Order no.	Description	Max. pressure	Weight
804 382	SO 44021-8 with reduced brass clamping ring Ø 6	100 bar	0.08 kg

Adjustable fitting

Characteristics:
Adjustable elbow made of brass.

Application:
Adjustable fitting for pipework for SPEEDY classic 1 Surface Mount fast closing clamps.

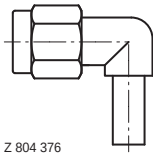

Order no.	Description	Max. pressure	Weight
804 376	SO 42621-6-A6	100 bar	0.03 kg

Adjustable fitting L 90

Characteristics:
Adjustable L-fitting made of brass.

Application:
Adjustable fitting for pipework for SPEEDY classic 1 Surface Mount fast closing clamps.

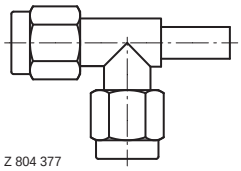

Order no.	Description	Max. pressure	Weight
804 377	SO 43621-A6-6-6	100 bar	0.05 kg

Adjustable fitting T 180

Characteristics:
Adjustable T-fitting made of brass.

Application:
Adjustable fitting for pipework for SPEEDY classic 1 Surface Mount fast closing clamps.

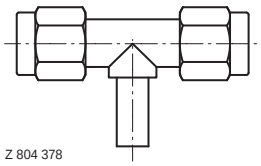

Order no.	Description	Max. pressure	Weight
804 378	SO 43621-6-A6-6	100 bar	0.06 kg

Technical data see page i.10 / for data sheets and 3D data see www.stark-inc.com
Stark Spannsysteme GmbH
A-6840 Götzis
Tel. +43 (0) 5523 64739-0
Fax +43 (0) 5523 64739-7
verkauf@stark-inc.com
www.stark-inc.com
Subject to modifications
WM-020-217-01-en

Brass pipe for spacing as required

Characteristics:
Brass pipe Ø 6/4 mm.

Application:
For pipework for SPEEDY classic 1 Surface Mount fast closing clamps at spacing as required.

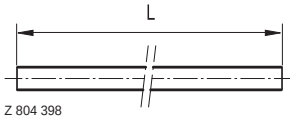

Order no.	Description	L	Max. pressure *	Weight
804 398	Brass pipe Ø 6/4 mm	1000	80 bar	0.13 kg
804 399	Brass pipe Ø 6/4 mm	1500	80 bar	0.20 kg

*) Use steel pipe for higher pressures.

Shut-off valve

Characteristics:
Shut-off valve for installation in the pipework.

Application:
Shutting off individual clamping circuits.

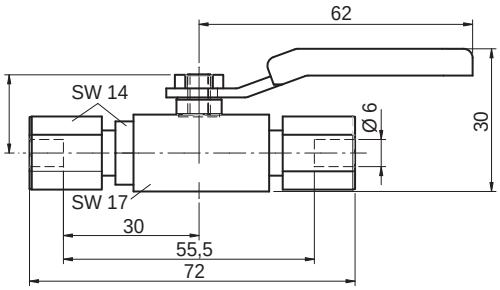

Order no.	Description	Max. pressure	Weight
999 104	Shut-off valve with ball valve for pipework	64 bar	0.10 kg

Stark Spannsysteme GmbH
A-6840 Götzis
Tel. +43 (0) 5523 64739-0
Fax +43 (0) 5523 64739-7
verkauf@stark-inc.com
www.stark-inc.com
Subject to modifications
WM-020-217-01-en

Retractable nipple

3

The critical conflicts of stable clamping and the necessary movement for thermal expansion are ideally solved with three different retractable nipples.

Independent of the size of the pallet, you always have a fixed zero point also during machining. You can define where the retractable nipple with zero point is positioned.

Precise positioning for stable clamping

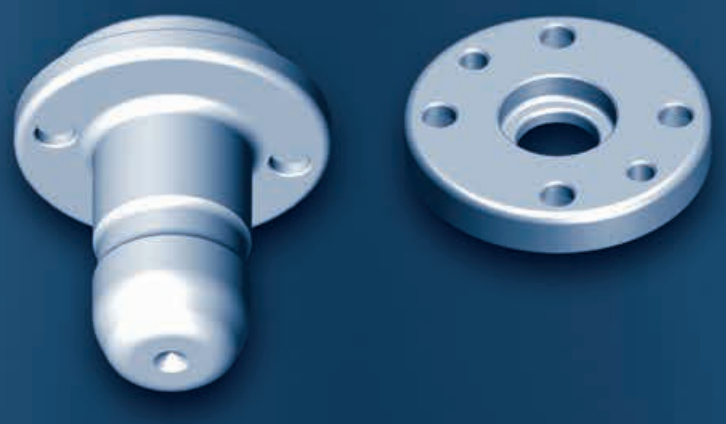

One thing is certain – the fixed zero point with SPEEDY retractable nipples:

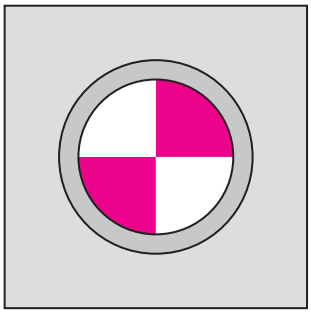

1) Retractable nipple with zero point

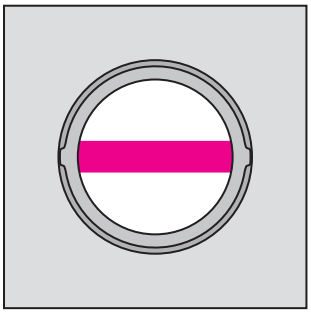

2) Retractable nipple with equaliser

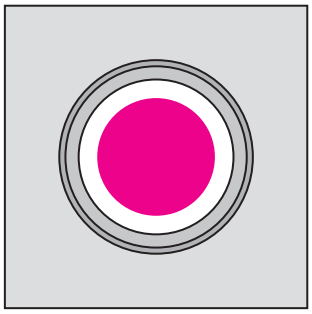

3) Retractable nipple

Retractable nipple with zero point in the middle of the pallet

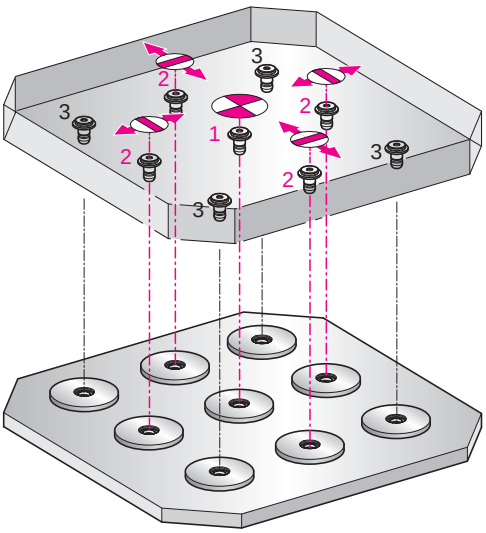

Retractable nipple with zero point at the top left corner of the pallet

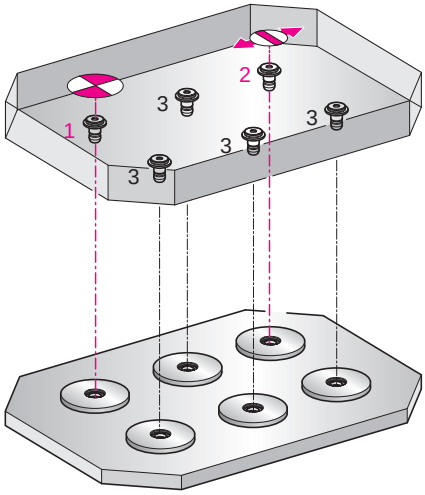

Retractable nipple

• with zero point

Characteristics:
Retractable nipple with zero point.

Application:
For positioning and clamping on machine pallets, machine vices, chucks, jigs, direct workpiece clamping.

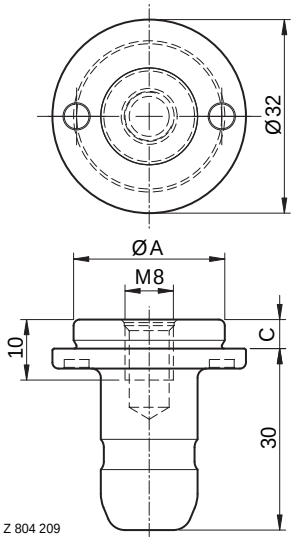

Order no.	Ø A	C	Screw grade	Tightening torque at the nipple	Tightening torque at the screw	Weight	Data sheet
804 209	25	4.8	min. 8.8	30 Nm	25 Nm	0.07 kg	D029
804 219	16	4.8	min. 8.8	30 Nm	25 Nm	0.06 kg	D029
804 226	25	19.8	min. 8.8	30 Nm	25 Nm	0.13 kg	D029
804 228	16	19.8	min. 8.8	30 Nm	25 Nm	0.13 kg	D029

Retractable nipple

• with equaliser

Characteristics:
Retractable nipple with equaliser on one axis.

Application:
On machine pallets, machine vices, chucks, jigs, direct workpiece clamping.

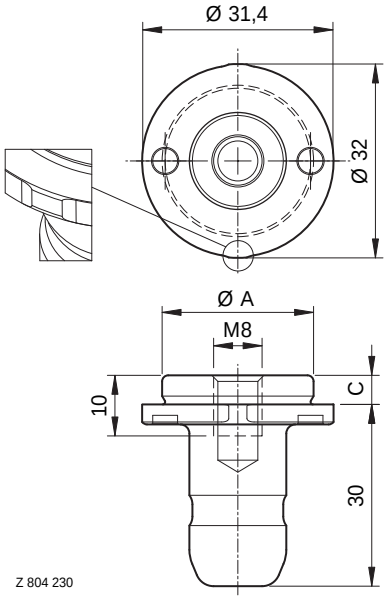

Order no.	Ø A	C	Screw grade	Tightening torque at the nipple	Tightening torque at the screw	Weight	Data sheet
804 230	25	4.8	min. 8.8	30 Nm	25 Nm	0.07 kg	D029
804 232	16	4.8	min. 8.8	30 Nm	25 Nm	0.06 kg	D029
804 234	25	19.8	min. 8.8	30 Nm	25 Nm	0.19 kg	D029
804 236	16	19.8	min. 8.8	30 Nm	25 Nm	0.08 kg	D029

Technical data see page i.10 / for data sheets and 3D data see www.stark-inc.com

Stark Spannsysteme GmbH
A-6840 Götzis
Tel. +43 (0) 5523 64739-0
Fax +43 (0) 5523 64739-7
verkauf@stark-inc.com
www.stark-inc.com

Subject to modifications
WM-020-217-01-en

Retractable nipple

Characteristics:
Retractable nipple without centring.

Application:
For secure clamping on machine pallets, machine vices, chucks, jigs, direct workpiece clamping.

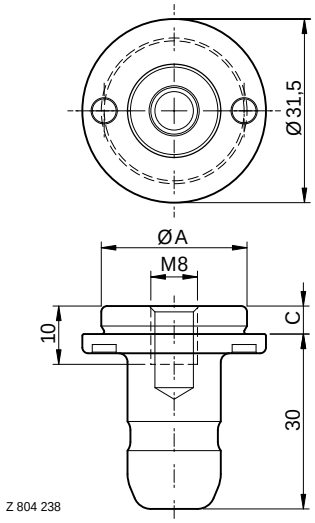

Order no.	Ø A	C	Screw grade	Tightening torque at the nipple	Tightening torque at the screw	Weight	Data sheet
804 238	25	4.8	min. 8.8	30 Nm	25 Nm	0.07 kg	D029
804 240	16	4.8	min. 8.8	30 Nm	25 Nm	0.06 kg	D029
804 242	25	19.8	min. 8.8	30 Nm	25 Nm	0.13 kg	D029
804 244	16	19.8	min. 8.8	30 Nm	25 Nm	0.08 kg	D029

Application example

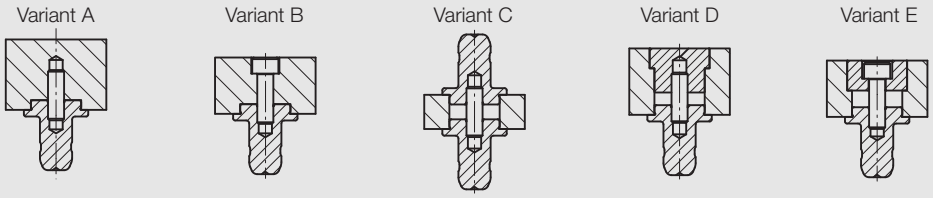

Variant A:
For applications in which nipple bores are not allowed on the surface of the pallet, or in case of direct workpiece clamping. This variant is not possible for retractable nipples with equaliser.

Variant B:
Simple nipple fastening from above, if high accuracy between the position of the nipple and the top side of the pallet is not required.

Variant C:
Ideal fastening variant for clamping for manufacturing with reversing. The highest accuracy is ensured because the nipple is fastened in the same mounting bore. This variant is not possible for retractable nipples with equaliser.

Variant D, E:
These fastening variants are to be preferred. The precision bore for the nipple and all necessary positioning bores on the pallet can be manufactured in one work step. As a result the accuracy between the positions is very high.

Special nipple fastenings are required for these variants (3.4).

SPEEDY classic 1	Tightening torque at the nipple	Tightening torque at the screw	Min. strength class
6,700 N	30 Nm	25 Nm	8.8
10,000 N	30 Nm	25 Nm	10.9

Technical data see page i.10 / for data sheets and 3D data see www.stark-inc.com

Nipple fastening D

Characteristics:
Makes it possible to fasten the nipple with one clamping action. As a result the highest accuracy is achieved. The integrated O-ring prevents the entry of coolant during machining.

Application:
Machine pallets, machine vices, chucks, jigs, direct workpiece clamping.

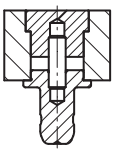

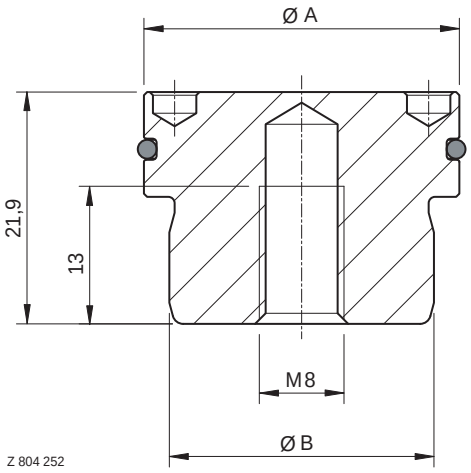

Order no.	For nipple Ø	Ø A	Ø B	Weight	Data sheet
804 252	25	29.8	25	0.05 kg	D029
804 253	16	19.8	16	0.03 kg	D029

Application example

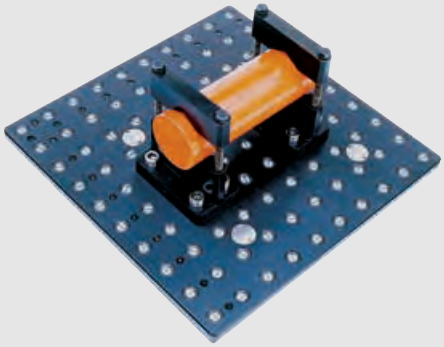

Nipple fastening D

Nipple fastening E

Characteristics:
Makes it possible to fasten the nipple with one clamping action. As a result the highest accuracy is achieved.

Application:
Machine pallets, machine vices, chucks, jigs, direct workpiece clamping.

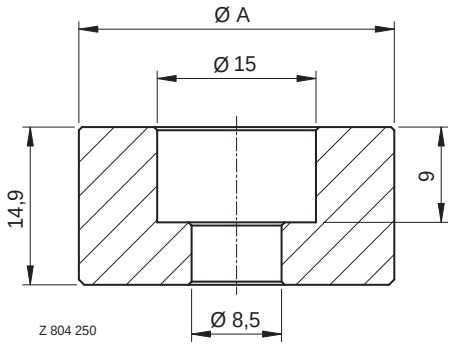

Order no.	For nipple Ø	Ø A	Weight	Data sheet
804 250	25	29.8	0.07 kg	D029
804 251	16	19.8	0.07 kg	D029
804 249	25	34.8	0.07 kg	D029

Technical data see page i.10 / for data sheets and 3D data see www.stark-inc.com

Stark Spannsysteme GmbH
A-6840 Götzis
Tel. +43 (0) 5523 64739-0
Fax +43 (0) 5523 64739-7
verkauf@stark-inc.com
www.stark-inc.com

Subject to modifications
WM-020-217-01-en

Application example

Nipple fastening A

Application example

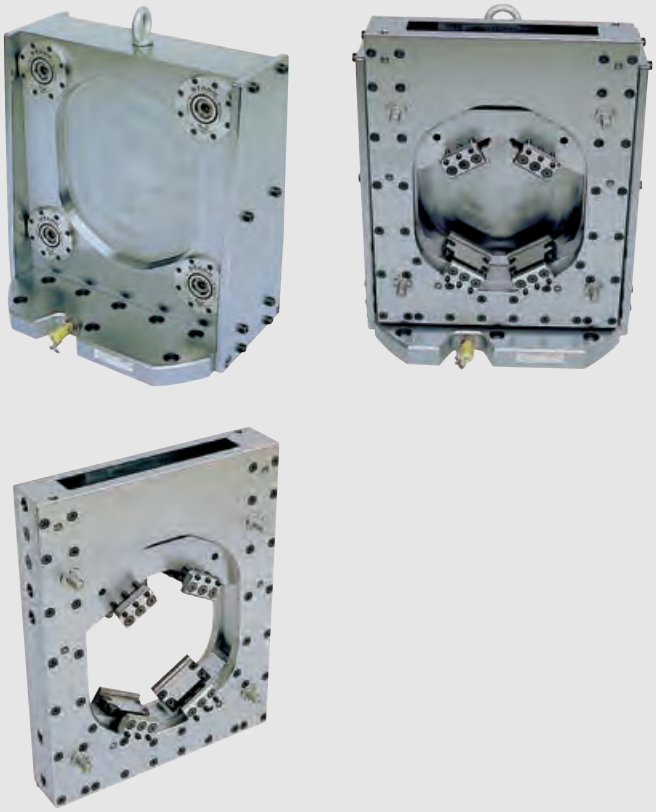

Nipple fastening C

Application example

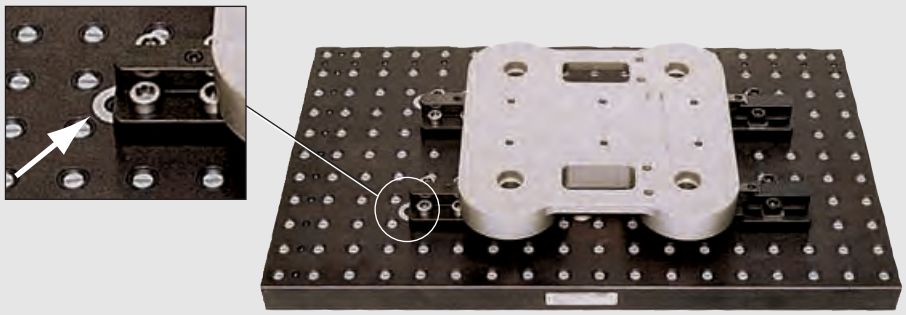

Nipple fastening E

Stark Spannsysteme GmbH
A-6840 Götzis
Tel. +43 (0) 5523 64739-0
Fax +43 (0) 5523 64739-7
verkauf@stark-inc.com
www.stark-inc.com

Setscrew

Characteristics:
Setscrew M8.

Application:
Retractable nipple fastening.

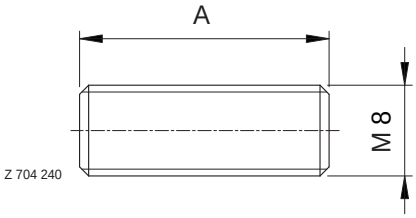

Order no.	Dimension	Size A	Thread depth size B	Application material	SPEEDY classic 1	Strength class	Data sheet
704 240	M8.0 x 20	20 mm	11 mm	Steel	6,700 N	8.8	D 029
704 242	M8.0 x 25	25 mm	16 mm	Aluminium	10,000 N	10.9	D 029

Application example

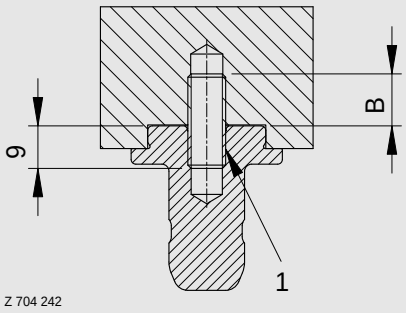

1) Bond setscrew in the nipple using Loctite 648

Bearing plate Ø 105

Characteristics:
Bearing plate made of hardened steel.

High resistance to wear with unhardened machine pallet surfaces.

Application:
Bearing plate for SPEEDY classic 1 TWISTER or SPEEDY classic 1 TORNADO. For the usage of unhardened machine pallet surfaces.

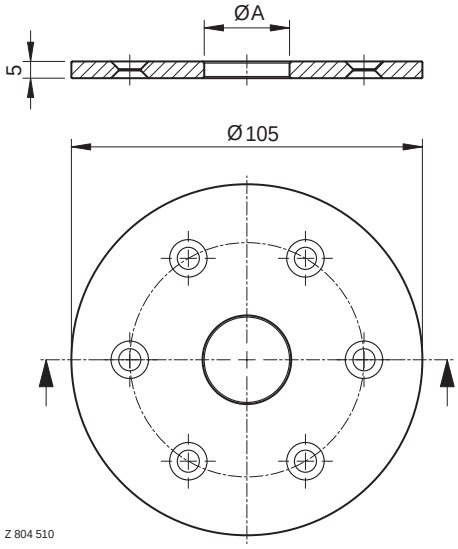

Order no.	Surface	Ø A	Weight	Data sheet
804 510	Ground on both sides	25	0.3 kg	D029, D033
804 510-R	Unfinished on one side for subsequent grinding in assembled state	25	0.3 kg	D029, D033
804 272	Ground on both sides	16	0.3 kg	D029, D033

Technical data see page i.10 / for data sheets and 3D data see www.stark-inc.com

Stark Spannsysteme GmbH
A-6840 Götzis
Tel. +43 (0) 5523 64739-0
Fax +43 (0) 5523 64739-7
verkauf@stark-inc.com
www.stark-inc.com

Subject to modifications
WM-020-217-01-en

Spacer washer for TWISTER

- with O-ring

Characteristics:
Very precise mount control (down to 0.01 mm) possible, as due to the sealing of the centre bore, air can only escape at the 4 raised supports.

Application:
Spacer washer for sealing the centre bore and for equalising the height for SPEEDY classic TWISTER.

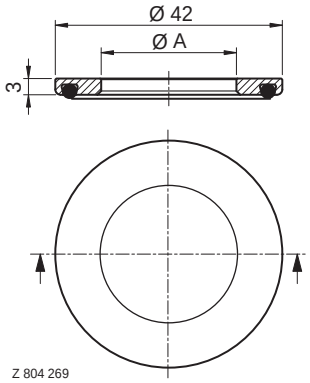

Order no.	Ø A	Weight	Data sheet
804 269	25	0.02 kg	D029, D033
804 271	16	0.02 kg	D029, D033

1) Nipple fastening
2) Countersunk screw DIN 7991
3) Hardened bearing plate
4) Spacer washer
5) Retractable nipple
6) SPEEDY Twister

Sectional view

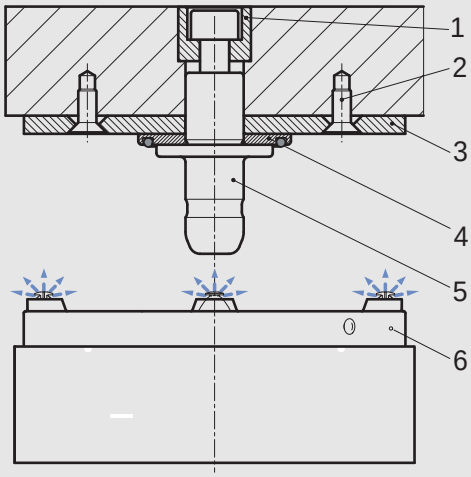

Practical example

SPEEDY classic 1 TWISTER fast closing clamps, fitted in plate

The spacer washer (4) is imperative for each SPEEDY classic 1 TWISTER and must be fitted to each retractable nipple!

Technical data see page i.10 / for data sheets and 3D data see www.stark-inc.com

Flange retractable nipple

Characteristics:
Retractable nipple for flanges.

Application:
Machine pallets, machine vices, chucks, jigs, direct workpiece clamping.

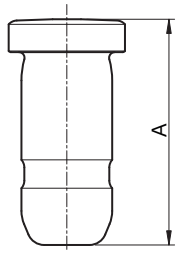

Z 801 004

Order no.	A	Weight	Data sheet
801 009	44.8	0.07 kg	D030

Application example

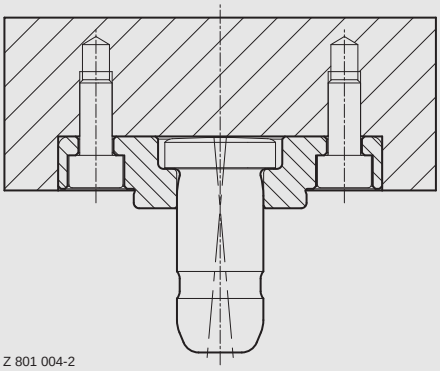

Z 801 004-2

The flange retractable nipple is mounted so that it can move to prevent possible jamming on pallet changes (particularly with heavy components and large machine pallets). It is used only for inserting machine pallets or workpieces, positioning and centring is performed using the zero point and equaliser flange.

Flange

- with zero point

Characteristics:
Fastening flange for retractable nipple, with zero point.

Application:
Machine pallets, machine vices, chucks, jigs, direct workpiece clamping.

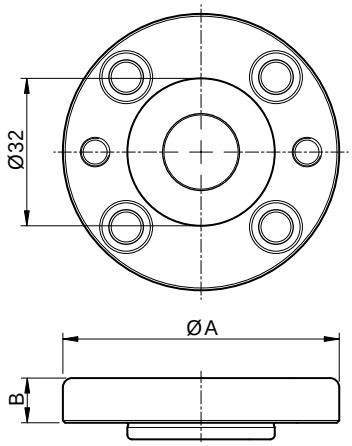

Z 801 006

Order no.	Ø A	B	Weight	Data sheet
801 010	68	14.7	0.20 kg	D030

Technical data see page i.10 / for data sheets and 3D data see www.stark-inc.com

Stark Spannsysteme GmbH
A-6840 Götzis
Tel. +43 (0) 5523 64739-0
Fax +43 (0) 5523 64739-7
verkauf@stark-inc.com
www.stark-inc.com

Subject to modifications
WM-020-217-01-en

Flange

• with equaliser

Characteristics:
Fastening flange for retractable nipple, with equaliser on one axis.

Application:
Machine pallets, machine vices, chucks, jigs, direct workpiece clamping.

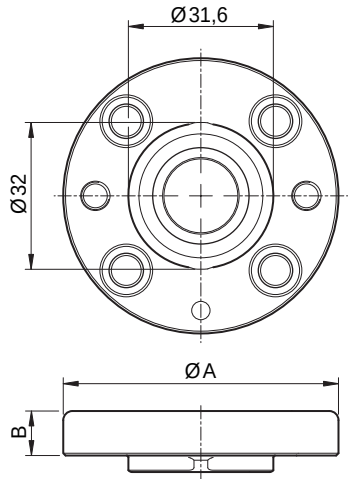

Order no.	Ø A	B	Weight	Data sheet
801 011	68	14.7	0.20 kg	D030

Flange

Characteristics:
Fastening flange for retractable nipple, without centring

Application:
Machine pallets, machine vices, chucks, jigs, direct workpiece clamping

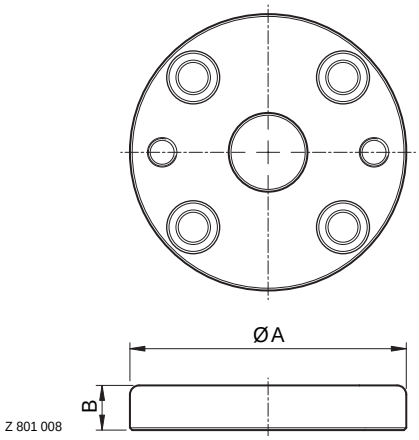

Order no.	Ø A	B	Weight	Data sheet
801 012	68	14.7	0.20 kg	D030

Stark Spannsysteme GmbH
A-6840 Götzis
Tel. +43 (0) 5523 64739-0
Fax +43 (0) 5523 64739-7
verkauf@stark-inc.com
www.stark-inc.com

Pressure boosters

4

The pressure boosters from STARK convert air pressure into hydraulic pressure and can be used from 30 to 180 bar.

With their "third hand" function (DHF) the workpiece or pallet is held in the position engaged after positioning.

Workpiece and pallet are thus secured against falling out and no longer need to be held by the operators. The clamping process is even quicker and safer.

The "third hand" function – the option for process safety:

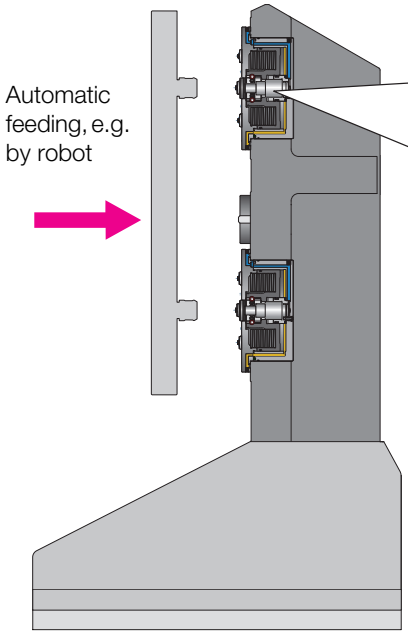

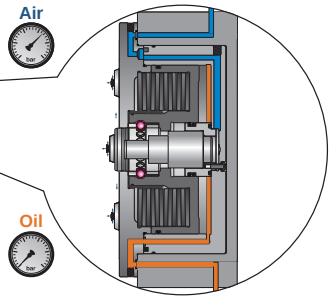

"Third hand" function, DHF
Explanation based on a SPEEDY classic 4, applies equally to all SPEEDY classic.

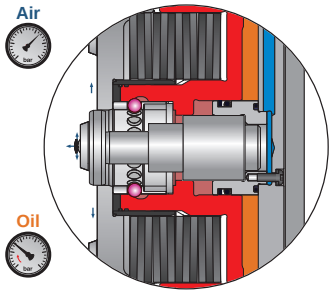

Retention function
The retention pressure is applied to the SPEEDY and the SPEEDY is ready for securely engaging the pallet.

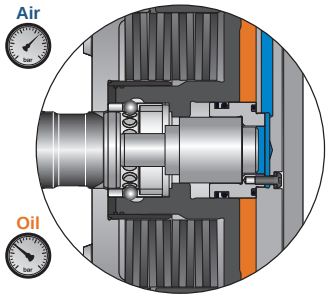

Feed
The pallet is fed by hand or by a handling system.

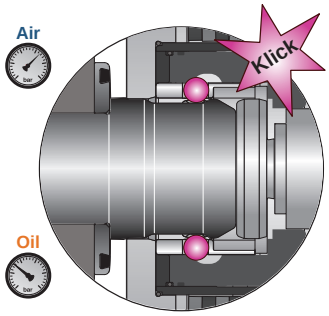

Engage
The retractable nipples are inserted, engaged and are then mechanically secured.

You can release the pallet, the handling system can move back. The pallet remains securely in place.

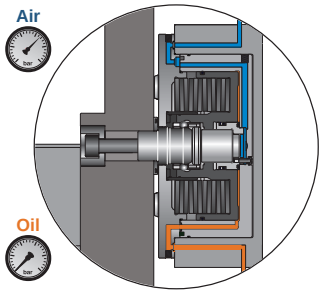

Position and clamp
The SPEEDY is de-pressurised. The pallet is now positioned, pulled in and securely clamped using the plate springs.

Function animation also at www.stark-inc.com

RECORD

Characteristics:
The pressure booster RECORD converts air pressure to the necessary hydraulic system pressure for the operation of the SPEEDYs.

Application:
Operation of 7 or 14 SPEEDY fast closing clamps up to max. 80 bar.

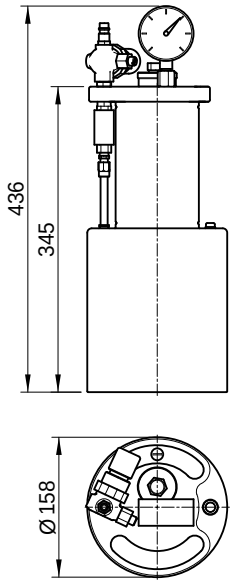

Order no.	Releases approx. [pcs.]	System pressure	Air pressure	Oil volume	Weight
804 411	14 SPEEDY	40 bar	6 bar	0.31 l	8.80 kg
804 412	7 SPEEDY	80 bar	6 bar	0.148 l	8.80 kg

Pressure booster can be expanded to DHF using article 804 427.

Hydraulic connection via hydraulic coupler 804 371, hydraulic hose not included with the items supplied.

BOOSTER

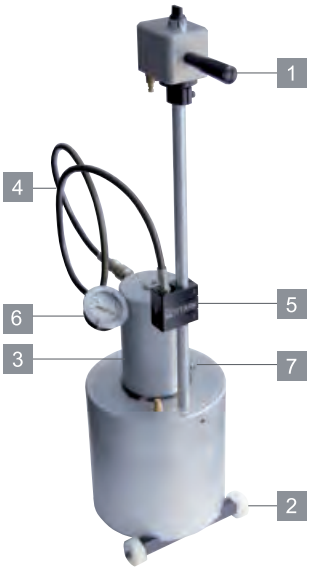

Characteristics:
The booster is used for releasing single-acting clamping systems. It converts compressed air into hydraulic pressure and is suitable for ranges from 30 to 80 bar.

Application:
1 Handle for safe transport
2 Two robust rollers and one foot for secure positioning (can be removed easily for stationary applications)
3 Pressure 40 bar with 1 litre oil capacityfor more than 20 SPEEDY classic 1
(also available with 80 bar pressure)
4 Hose available in various lengths also with self-sealing quick-release coupling
5 Holder for coupling for safe transport and for storage
6 Hydraulic pressure gauge with maximum pressure marking
7 Dipstick

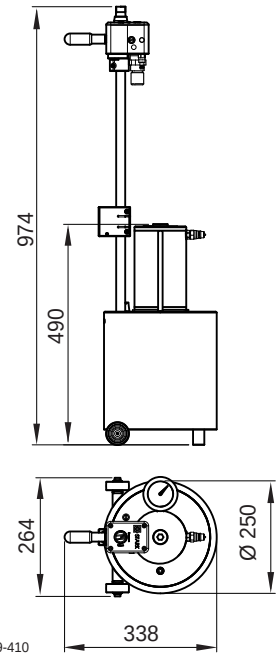

Order no.	Releases approx. [pcs.]	System pressure	Air pressure	Oil volume	Weight
804 432	45 SPEEDY	40 bar	6 bar	1 l	27,30 kg
804 433	20 SPEEDY	80 bar	6 bar	0.5 l	27,30 kg

Pressure booster can be expanded to DHF using article 804 427.

Hydraulic connection via hydraulic coupler 804 371, hydraulic hose not included with the items supplied.

Technical data see page i.10 / for data sheets and 3D data see www.stark-inc.com

Stark Spannsysteme GmbH
A-6840 Götzis
Tel. +43 (0) 5523 64739-0
Fax +43 (0) 5523 64739-7
verkauf@stark-inc.com
www.stark-inc.com

Subject to modifications
WM-020-217-01-en

Hydraulic hose with couplings

Characteristics:
Hydraulic hose with hydraulic coupler on both ends.

Application:
Is used for the connection between pressure booster and fast closing clamp plate or SPEEDY classic 1 Surface Mount.

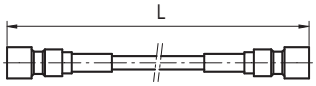

Z 704 150

Order no.	Self-sealing couplings	L	Max. pressure	Weight
704 150	No (952 044)	1.5 m	300 bar	0.60 kg
704 151	Yes (952 177)	1.5 m	300 bar	0.60 kg
704 152	No (952 044)	3.0 m	300 bar	0.60 kg
704 153	Yes (952 177)	3.0 m	300 bar	0.60 kg

Pedal control

Characteristics:
Pedal control for operating the pressure booster.

Application:
Operation of the pressure booster using a foot control.

The pressure booster does not need to be in the immediate vicinity.

Both hands are free for loading or for removing the workpieces to be machined.

Order no.	Description	Weight
804 419	Pedal control for pressure booster (incl. pneumatic hose and male connections)	1.50 kg

DHF pedal control (third hand function)

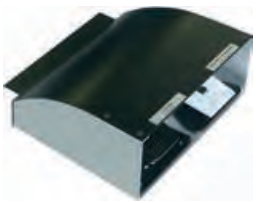

Characteristics:
Due to the special control of the pressure (operation) to the fast closing clamps, the workpiece, the pallet or the jig can be straightforwardly engaged. Feed, engage and clamp.

Application:
On a vertical clamping system or in case of feed by robots or handling systems.

Order no.	Description	Weight
804 427	DHF pedal control for pressure boosters (incl. pneumatic hose and male connections)	4.00 kg

Stark Spannsysteme GmbH
A-6840 Götzis
Tel. +43 (0) 5523 64739-0
Fax +43 (0) 5523 64739-7
verkauf@stark-inc.com
www.stark-inc.com

Hydraulic clamping pump

Characteristics:
Tandem plunger pump, incorporated in oil tank to save space, operates with oscillating movements and automatic stroke reversal control using a pilot-operated 4/2-way valve.

The stroke frequency and as a result the flow rate are dependent on the air pressure and on the hydraulic backpressure.

Application:
Small to medium-sized clamping and mounting devices with single action cylinders that operate primarily with intermittent duty (pressure build-up and pressure retention).

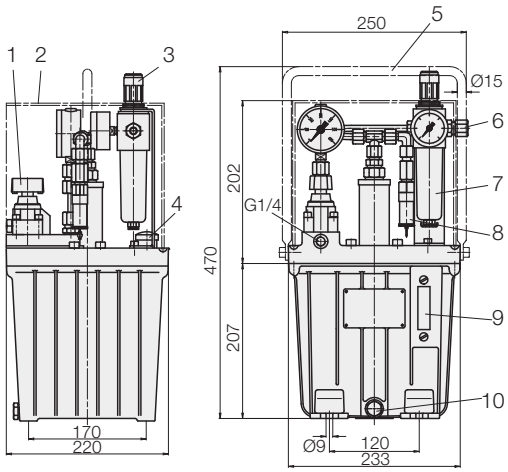

Z 8600 110

1) *3/2-way valve, manually or pneumatically operated*
2) *Cover (accessory)*
3) *Pressure regulator*
4) *Filler plug with air filter*
5) *Handle (accessory)*
6) *Pneumatic connection for pipe - Ø 8*
7) *Service unit, max. inlet pressure 16 bar*
8) *Safety valve*
9) *Oil level gauge*
10) *Oil drain plug*

Order no.	Description	Flow rate	Operating pressure	Air pressure	Weight
8600-110	Clamping pump with manually operated valve	25 cm3/s	100-500 bar	1.0-4.7 bar	20 kg
8600-111	Clamping pump with pneumatic valve	25 cm3/s	100-500 bar	1.0-4.7 bar	20 kg
8600-112	Clamping pump without valve	25 cm3/s	100-500 bar	1.0-4.7 bar	20 kg

Accessories:

0353-217	Handle
0353-714	Cover
3812-005	Lever with catch
3887-015	Acoustic attenuator for manual valve with lever
0381-206	Foot valve with catch including protective cover
3890-059	Compressed air hose NW 6
3890-071	Male union G1/4
3890-076	Hose clip

For more detailed information, refer to RÖMHELD data sheet D8.600.

Other hydraulic clamping pumps on request.

Technical data see page i.10 / for data sheets and 3D data see www.stark-inc.com

Stark Spannsysteme GmbH
A-6840 Götzis
Tel. +43 (0) 5523 64739-0
Fax +43 (0) 5523 64739-7
verkauf@stark-inc.com
www.stark-inc.com

Subject to modifications
WM-020-217-01-en

Hydraulic pump set

Characteristics:
Hydraulic pump set optionally with DHF function and sampling of the clamping check.

With integrated hydraulic and electrical control via remote control with 7m cable (with Harting connector).

Function triggered using control panel with three illuminated pushbuttons.

Supplied with hydraulic oil HLP32 and electrical connection with 10m long cable and 400 V connector.

Technical data:

Q = 3.2 l/min
V = 11 l
U = 400 V 50 Hz ~3PE
p = 45/15 bar
P = 0.55 kW
Valve and control voltage: 24 VDC
Medium: Hydraulic oil HLP32
DIN 51519/51524 Part 2
Connections: G 1/4

Application:
Particularly suitable for small to medium-sized clamping and mounting devices with single action cylinders that operate primarily with intermittent duty (pressure build-up and pressure retention).

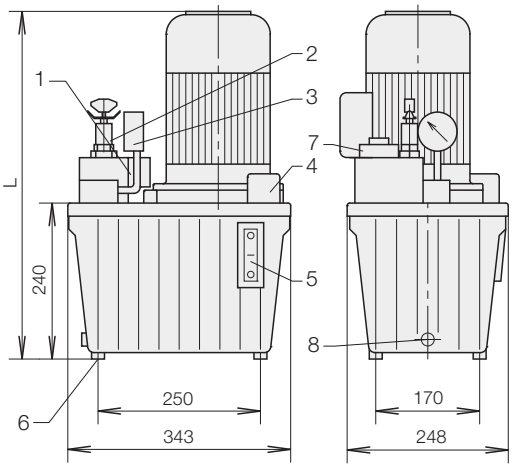

Z 8223 310

1) Filter check
2) Pressure limiting valve
3) Pressure gauge
4) Filler and breather filter
5) Oil level gauge
6) 4 fastening holes M8 x 8 deep
7) High pressure filter
8) Oil drain plug G 3/8

Order no.	Description	Weight
804 443	Hydraulic pump set with sampling of the clamping check	27 kg
804 444	Hydraulic pump set with sampling of the clamping check and DHF function	27 kg
804 445	Hydraulic pump set with DHF function	27 kg

For more detailed information, refer to RÖMHELD data sheet D8.021.

Other pump units available on request.

Stark Spannsysteme GmbH
A-6840 Götzis
Tel. +43 (0) 5523 64739-0
Fax +43 (0) 5523 64739-7
verkauf@stark-inc.com
www.stark-inc.com

Plates, angles, mounting towers

5

STARK develops and manufactures mounting towers to your requirements or drawings.

Your advantages:

- Direct application of your CAD data
- In-house Engineering department
- Air-conditioned measuring room with the latest instruments
- QA report on delivery for your quality management
- One contact for complete order processing

Mounting towers and fast closing clamp plates from in-house manufacture ... everything from a single source!

Flexible clamping solutions for the latest manufacturing systems:

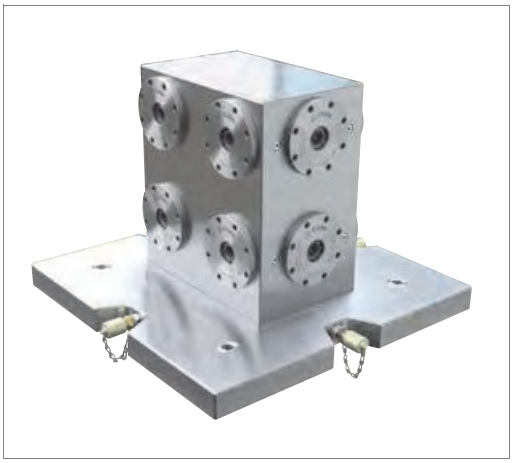

SPEEDY classic 1 fast closing clamps fitted to each side of the mounting tower.

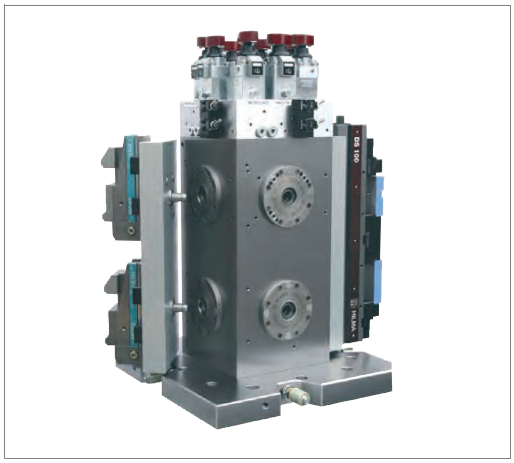

SPEEDY classic 1 fast closing clamps with media ducts fitted to each side of the mounting tower.

SPEEDY classic 1 fast closing clamps fitted to each side of the mounting tower.

SPEEDY classic 1 fast closing clamps on rotary joint for rotary applications.

STARK manufactures all applications in-house. Customer-specific solutions are optimally adapted to your requirements.

Consultation, planning, design, production, mounting, service – everything from a single source!

Fast closing clamp plate split in 3

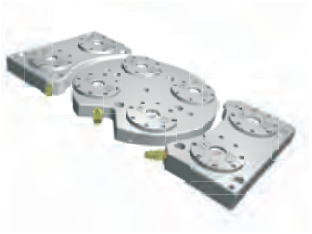

Characteristics:
Fast closing clamp plate split in 3 with SPEEDY classic 1 STANDARD.

Application:
On 4/5 axis machines for all common machining tasks such as milling, turning, grinding, eroding.

Detailed information to suit your machine on request.

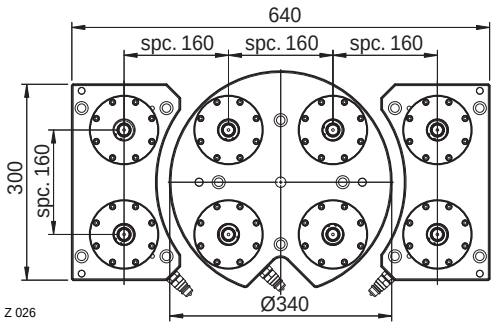

Order no.	Retention force	Insertion force	Hydr. pressure to release	Spacing	Weight	Machine type
105 010	25,000 N	6,700 N	35-40 bar	160 ± 0.01	64 kg	HERMLE

Fast closing clamp plate

Characteristics:
Fast closing clamp plate with SPEEDY classic 1 STANDARD.

Application:
On 3/4/5 axis machines for all common machining tasks such as milling, turning, grinding, eroding.

Detailed information to suit your machine on request.

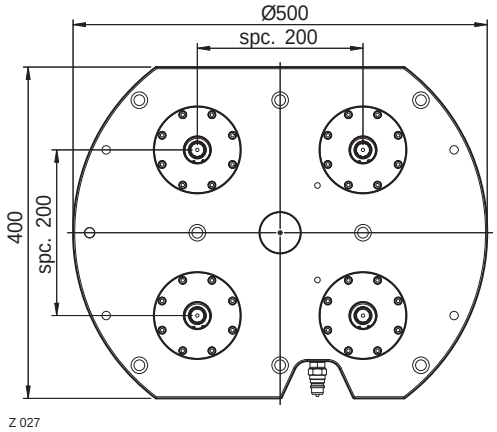

Order no.	Retention force	Insertion force	Hydr. pressure to release	Spacing	Weight	Machine type
105 020	25,000 N	6,700 N	35-40 bar	200 ± 0.01	48 kg	DMU

Fast closing clamp face plate

Characteristics:
Fast closing clamp face plate incl. clamping check, connecting shaft and rotary joint with SPEEDY classic 1 STANDARD.

Application:
On lathes and grinding machines.

Detailed information to suit your machine on request.

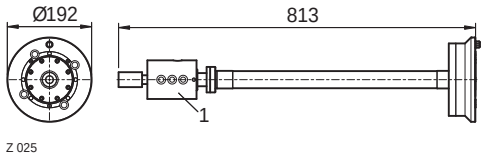

1) GAT rotary joint

Order no.	Retention force	Insertion force	Hydr. pressure to release	Weight	Machine type
105 030	25,000 N	6,700 N	35-40 bar	42 kg	GILDEMEISTER

Technical data see page i.10 / for data sheets and 3D data see www.stark-inc.com

Stark Spannsysteme GmbH
A-6840 Götzis
Tel. +43 (0) 5523 64739-0
Fax +43 (0) 5523 64739-7
verkauf@stark-inc.com
www.stark-inc.com

Subject to modifications
WM-020-217-01-en

Angle

Characteristics:
Angle with SPEEDY classic 1 STANDARD.

Application:
Can be used on machine tools for all common machining tasks.

IMPORTANT: pressure booster with DHF function required (see section 4).

Other angles available on request.

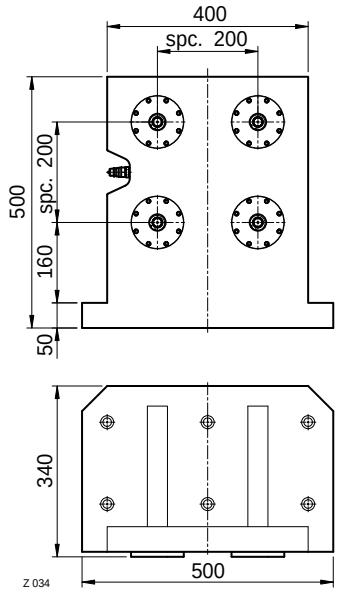

Order no.	Retention force	Insertion force	Hydr. pressure to release	Spacing	Weight
105 040	25,000 N	6,700 N	35-40 bar	200 ± 0.01	185 kg

Double angle

Characteristics:
Double angle with SPEEDY classic 1 STANDARD.

Application:
Can be used on machine tools for all common machining tasks.

Other double angles available on request.

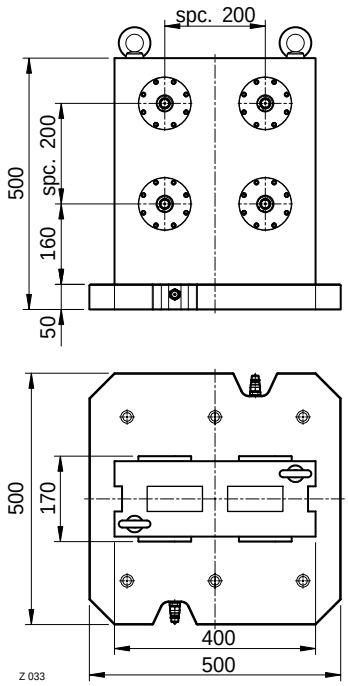

Order no.	Retention force	Insertion force	Hydr. pressure to release	Spacing	Weight
105 050	25,000 N	6,700 N	35-40 bar	200 ± 0.01	262 kg

Stark Spannsysteme GmbH
A-6840 Götzis
Tel. +43 (0) 5523 64739-0
Fax +43 (0) 5523 64739-7
verkauf@stark-inc.com
www.stark-inc.com

Mounting tower

• with valve system

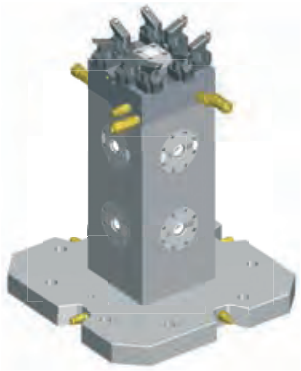

Characteristics:
Mounting tower with valve system with SPEEDY classic 1 with integrated media ducts.

The supply of energy is coupled automatically during positioning and clamping.

Actuation by manually operated valve on the mounting tower (each side can be controlled separately).

Application:
Can be used on machine tools for all common machining tasks.

For usage of pallets with hydraulic actuation, pneumatic sampling etc.

Other mounting towers with valve system available on request.

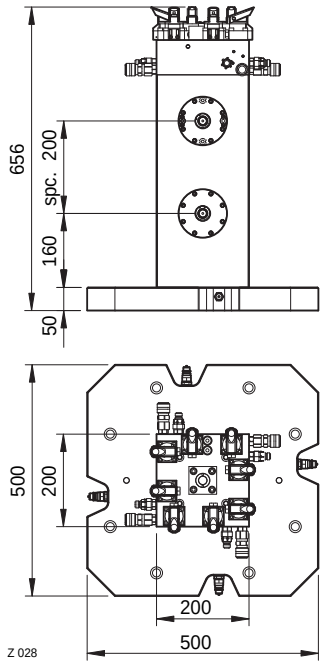

Order no.	Retention force	Insertion force	Hydr. pressure to release	Spacing	Weight
105 060	25,000 N	6,700 N	35-40 bar	200 ± 0.01	286 kg

Mounting tower

Characteristics:
Mounting tower with valve system with SPEEDY classic 1 with integrated media ducts.

The supply of energy is coupled automatically during positioning and clamping.

Application:
Can be used on machine tools for all common machining tasks.

Other mounting towers available on request.

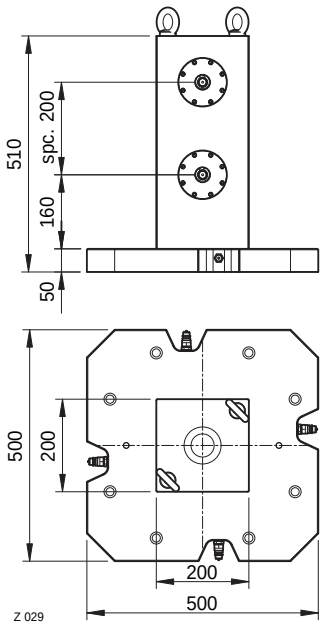

Order no.	Retention force	Insertion force	Hydr. pressure to release	Spacing	Weight
105 070	25,000 N	6,700 N	35-40 bar	200 ± 0.01	242 kg

Technical data see page i.10 / for data sheets and 3D data see www.stark-inc.com

Stark Spannsysteme GmbH
A-6840 Götzis
Tel. +43 (0) 5523 64739-0
Fax +43 (0) 5523 64739-7
verkauf@stark-inc.com
www.stark-inc.com

Subject to modifications
WM-020-217-01-en

Vice pallet

Characteristics:
Pallet with machine vice for mounting on mounting towers or fast closing clamp plates, two media ducts on the underside.

Application:
Can be used on machine tools for all common machining tasks.

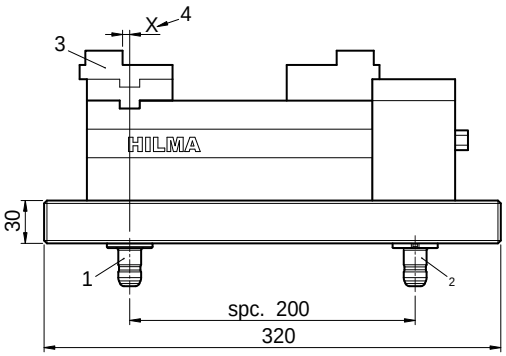

Z 032

1) Nipple with zero point
2) Nipple with equaliser
3) The distance X between the nipple with zero point and the fixed jaws should always be kept the same if several identical vices are fitted! (Standard tolerance at STARK ±0.01)

Order no.	Spacing	Vice HILMA CS 80 H	Weight
105 080	200 ± 0.01	with	22 kg
105 090	200 ± 0.01	without	12 kg

Application example

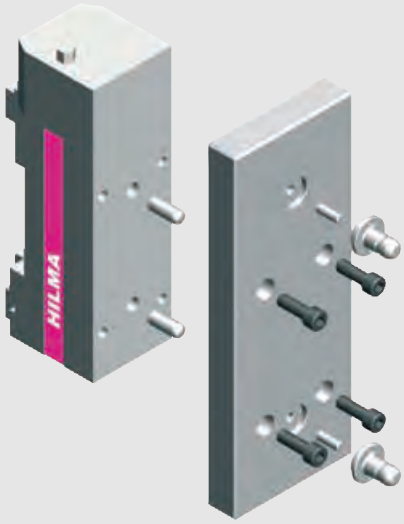

On the usage of media ducts the machine vice can be operated directly.

Extension of the machine pallet to jig with integrated HILMA machine vice

Technical data see page i.10 / for data sheets and 3D data see www.stark-inc.com

Media ducts (MD)

6

Media ducts are used to carry media, e.g. oil, air, water etc. through the zero point clamping system SPEEDY classic.

They allow, e.g. clamping devices fitted to the machine pallets to be supplied with power (hydraulic oil, compressed air).

Media ducts comprise two components – one for installation in SPEEDY and one for installation in the pallet that is automatically coupled when the retractable nipples are clamped.

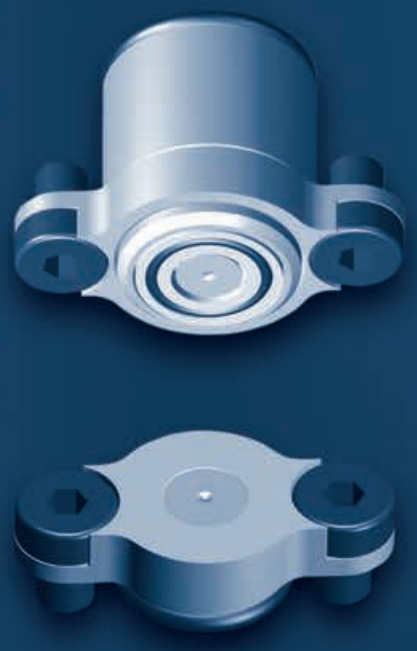

Zero point clamping and media duct integrated into one system!

Complex zero point clamping solutions using media duct:

SPEEDY classic 1 with two or three integrated media ducts

SPEEDY classic 1 with three integrated media ducts, installed in mounting tower, can be isolated using built-in valves

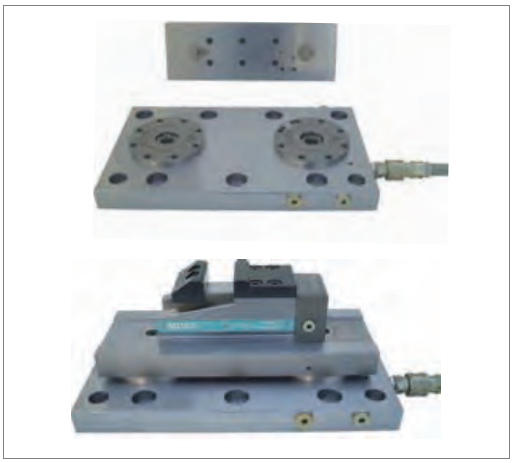

Set plate with SPEEDY classic 1 with an integrated media duct for controlling a machine vice MC60

Media duct with multiple coupling with blow-out ducts in middle of the pallet

Information on the media duct NW 4

Advantages

- Media ducts can be integrated directly in the SPEEDY zero point clamping system.
- Up to 4 media ducts per SPEEDY are possible.
- The coupling travel is matched to the travel of the SPEEDYs.

Technical data

Min. coupling force	Operating pressure	Flow rate
250 N	Max. 200 bar	28 l/min with static pressure of 90 bar on HLP 46

Formulas for calculations

Insertion force SPEEDY classic 1 = 10,000 N or 6,700 N

Coupling force F [N] = (250 + 7.1 x p [bar]) x n
(n = number of pipes pressurised to the same pressure in coupled state)

- Unpressurised pipes are subject to 250 N spring force.
- The sum of the axial forces on the media ducts acts against the insertion force on the SPEEDYs.
- The actuating force and the coupling force to be absorbed must not exceed the insertion force on the zero point clamping system!

Diagram for determining the coupling force per media duct NW 4

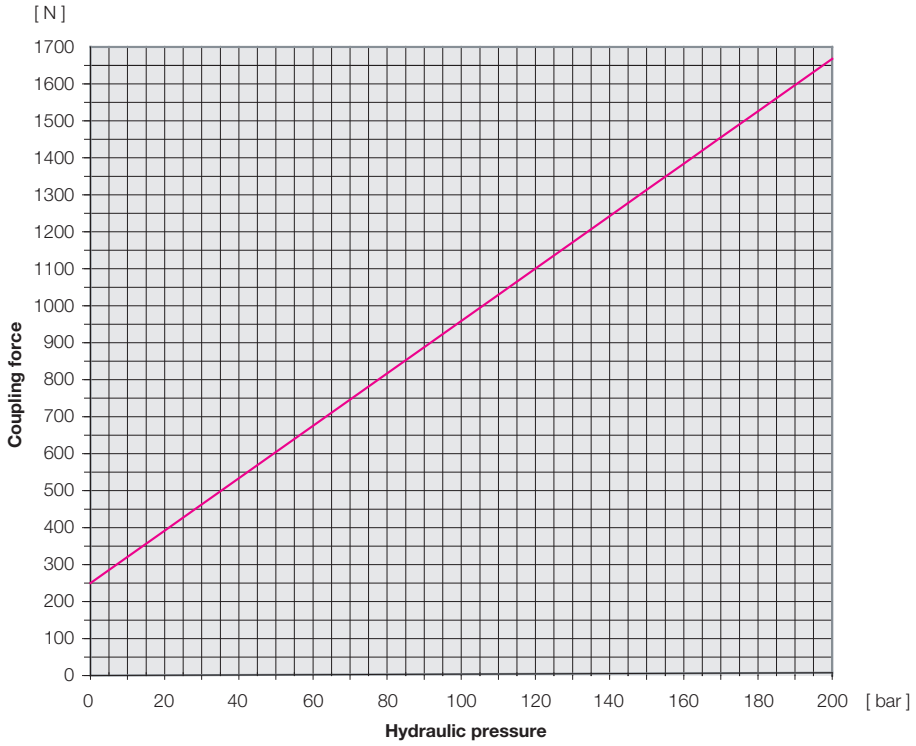

Important notes for the correct usage of the media ducts:

- The media ducts are only allowed to be coupled when unpressurised.
- Machine pallets with media ducts fitted are not allowed to be pressurised when uncoupled.
- Concentric pre-positioning of Ø 0.2 mm is necessary.
- Both media duct components are closed when uncoupled.

Our consultants will be pleased to advise you on the correct usage of media ducts.

Technical data see page i.10 / for data sheets and 3D data see www.stark-inc.com
Stark Spannsysteme GmbH
A-6840 Götzis
Tel. +43 (0) 5523 64739-0
Fax +43 (0) 5523 64739-7
verkauf@stark-inc.com
www.stark-inc.com
Subject to modifications
WM-020-217-01-en

Media duct NW 4 coupling mechanism

- SPEEDY side
- With mounting flange

Characteristics:
Media duct for the supply of hydraulic oil and air, other media on request.

The media duct is coupled by the drawing in stroke of the fast closing clamps and is self-sealing when uncoupled.

Together with the SPEEDY classic fast closing clamps, the necessary positioning is provided by the fast closing clamps.

Application:
For direct installation in fast closing clamps, as well as single and multiple couplings with and without blow-out ducts.

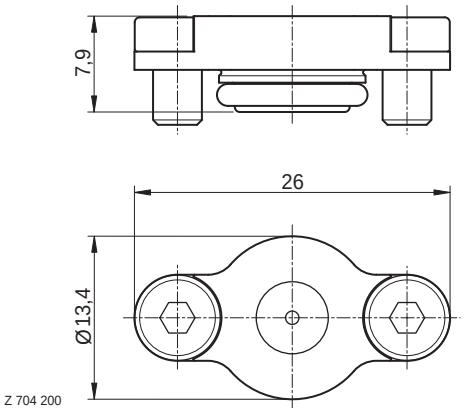

Order no.	Max. coupling force	Weight	Data sheet
704 200	See diagram at the start of this section	0.02 kg	D023

Fastening screws included with the items supplied.

Media duct NW 4 coupling nipple

- Pallet side
- With mounting flange

Characteristics:
Media duct for the supply of hydraulic oil and air, other media on request.

The media duct is coupled by the drawing in stroke of the fast closing clamps and is self-sealing when uncoupled.

Application:
For direct installation in machine pallets, as well as single and multiple couplings with and without blow-out ducts.

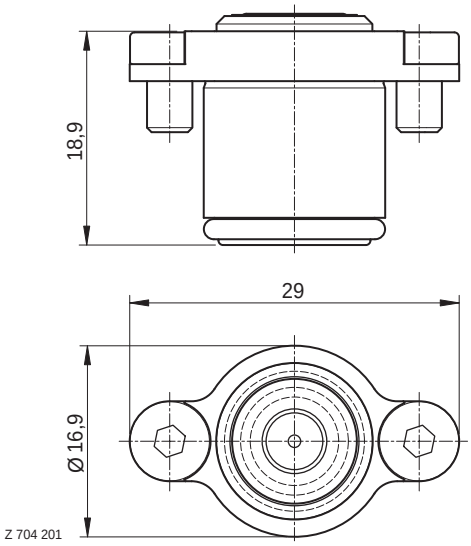

Order no.	Max. coupling force	Weight	Data sheet
704 201	See diagram at the start of this section	0.03 kg	D025

Fastening screws included with the items supplied.

Application example

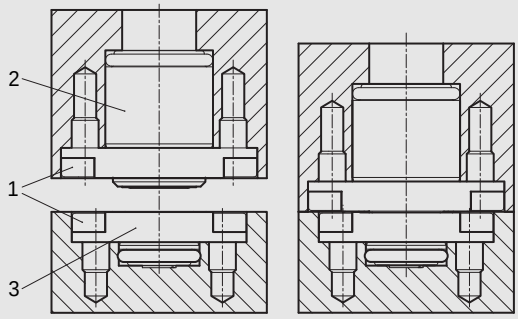

1) Fastening screws
2) Media duct pallet side
3) Media duct SPEEDY side

Stark Spannsysteme GmbH
A-6840 Götzis
Tel. +43 (0) 5523 64739-0
Fax +43 (0) 5523 64739-7
verkauf@stark-inc.com
www.stark-inc.com

Subject to modifications
WM-020-217-01-en

Media duct NW 4 coupling nipple

- Pallet side

Characteristics:
Media duct for the supply of hydraulic oil and air, other media on request.

The media duct is coupled by the drawing in stroke of the fast closing clamps and is self-sealing when uncoupled.

Application:
For two-piece installation in machine pallets, as well as single and multiple couplings with and without blow-out ducts, e. g. combined with hardened bearing plate.

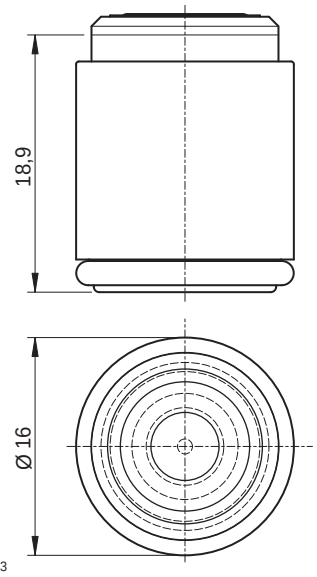

Order no.	Max. coupling force	Weight	Data sheet
704 203	See diagram on page 6.2	0.02 kg	D083

Application example

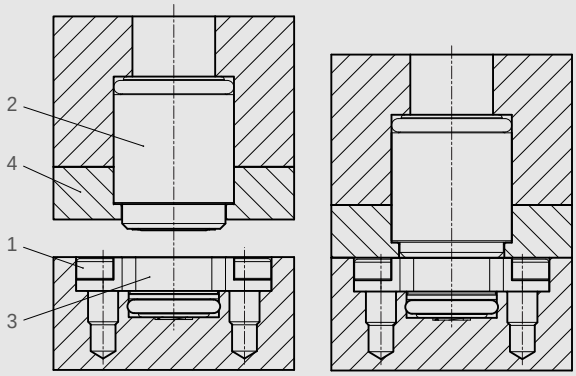

1) Fastening screws
2) Media duct pallet side
3) Media duct SPEEDY side
4) Bearing plate

Technical data see page i.10 / for data sheets and 3D data see www.stark-inc.com

Stark Spannsysteme GmbH
A-6840 Götzis
Tel. +43 (0) 5523 64739-0
Fax +43 (0) 5523 64739-7
verkauf@stark-inc.com
www.stark-inc.com

Subject to modifications
WM-020-217-01-en

Multiple coupling NW4 coupling mechanism

• SPEEDY side

Characteristics:
Media duct with one or more control circuits.

Integrated blow-out ducts.

Application:
Operation of jigs or hydraulic vices on machine pallets.

Particularly suitable for automated loading due to integrated blow-out ducts.

Upgrading existing zero point clamping system with media ducts.

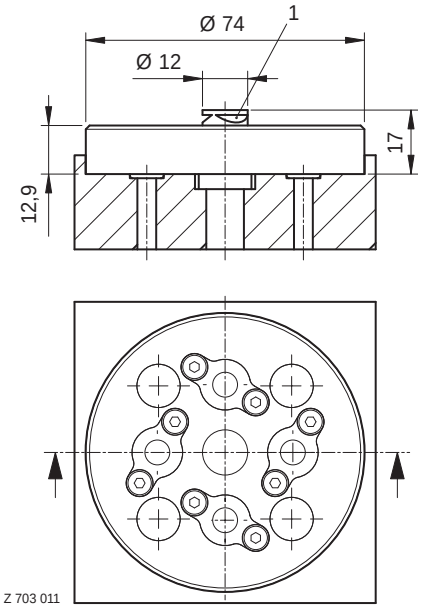

Order no.	Pos. and number of the media ducts (see fig. on page 6.7)	Weight	Data sheet
703 009	1	0.50 kg	D042
703 010	2	0.50 kg	D042
703 012	3	0.50 kg	D042
703 011	4	0.50 kg	D042

Fastening screws and screw covers included in the items supplied.

Characteristics:
Media duct with six control circuits.

Integrated blow-out ducts.

Application:
Operation of jigs or hydraulic vices on machine pallets.

Particularly suitable for automated loading due to integrated blow-out ducts.

Upgrading existing zero point clamping system with media ducts.

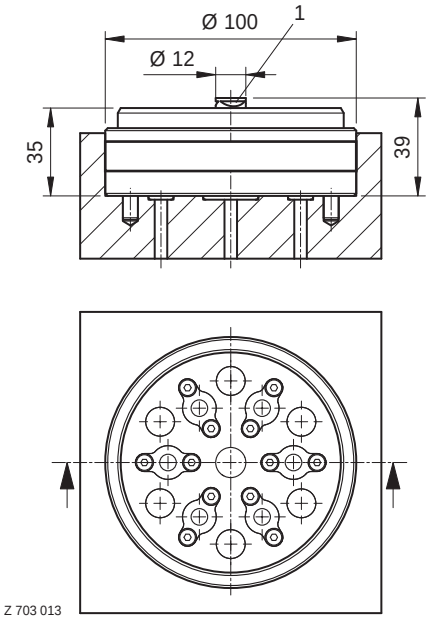

Order no.	Pos. and number of the media ducts (see fig. on page 6.7)	Weight	Data sheet
703 013	6	2,00 kg	D059
703 022	5	2,00 kg	D059

Fastening screws and screw covers included in the items supplied.

Stark Spannsysteme GmbH
A-6840 Götzis
Tel. +43 (0) 5523 64739-0
Fax +43 (0) 5523 64739-7
verkauf@stark-inc.com
www.stark-inc.com

Subject to modifications
WM-020-217-01-en

Multiple coupling NW4 coupling nipple

- Pallet side

Characteristics:
Media duct with 1-4 control circuits.

Integrated blow-out ducts.

Application:
Operation of jigs or hydraulic vices on machine pallets.

Particularly suitable for automated loading due to integrated blow-out ducts.

Upgrading existing zero point clamping system with media ducts.

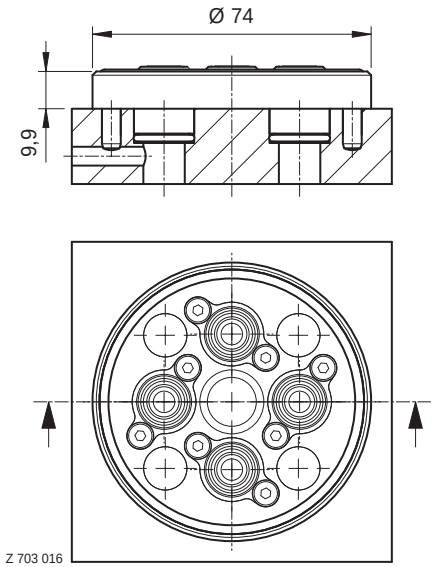

Order no.	Pos. and number of the media ducts (see figure on page 6.7)	Weight	Data sheet
703 014	1	0.50 kg	D040
703 015	2	0.50 kg	D040
703 017	3	0.50 kg	D040
703 016	4	0.50 kg	D040

Fastening screws and screw covers included in the items supplied.

Characteristics:
Media duct with six control circuits.

Integrated blow-out ducts.

Application:
Operation of jigs or hydraulic vices on machine pallets.

Particularly suitable for automated loading due to integrated blow-out ducts.

Upgrading existing zero point clamping system with media ducts.

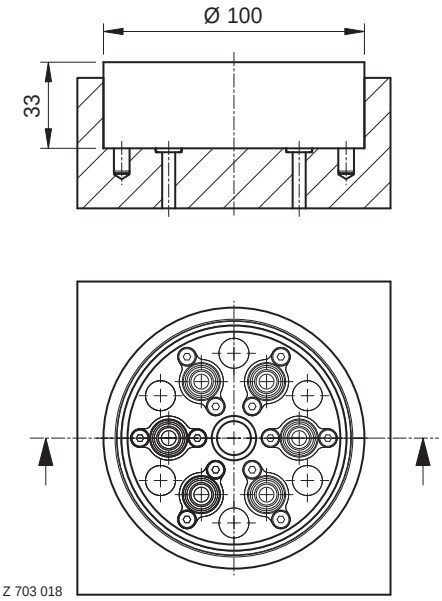

Order no.	Pos. and number of the media ducts	Weight	Data sheet
703 018	6	1.50 kg	D059
703 023	5	1.50 kg	D059

Fastening screws and screw covers included in the items supplied.

Technical data see page i.10 / for data sheets and 3D data see www.stark-inc.com

Stark Spannsysteme GmbH
A-6840 Götzis
Tel. +43 (0) 5523 64739-0
Fax +43 (0) 5523 64739-7
verkauf@stark-inc.com
www.stark-inc.com

Subject to modifications
WM-020-217-01-en

Application example

1x coupling | 2x coupling | 3x coupling | 4x coupling | 6x coupling

1) Compressed air
2) Feed 1
3) Return 1
4) Feed 2
5) Return 2
6) Feed 3
7) Return 3

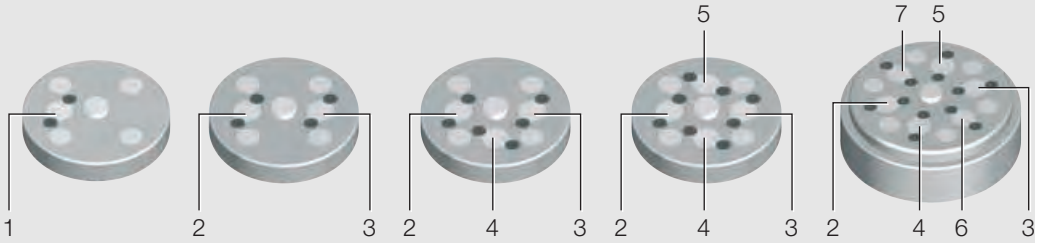

Note:
Depending on the number of media ducts, the insertion force of the SPEEDYs will change (see illustration on page 6.2).

Media duct NW 4 blanking plug

Characteristics:
Blanking plug for media ducts.

Application:
For sealing media ducts that are not required.

Matches 704 200 on the Speedy side.

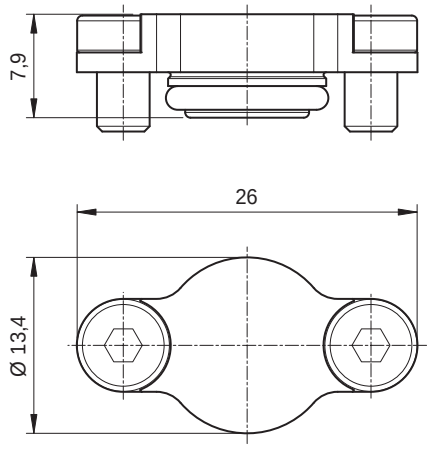

Z 704 208

Order no.	Weight	Data sheet
704 208	0.01 kg	D023

Fastening screws included with the items supplied.

Stark Spannsysteme GmbH
A-6840 Götzis
Tel. +43 (0) 5523 64739-0
Fax +43 (0) 5523 64739-7
verkauf@stark-inc.com
www.stark-inc.com

Subject to modifications
WM-020-217-01-en

Media duct pliers

Characteristics:
Due to the matched contour of the media duct pliers, the media duct is not damaged during removal.

Application:
Pliers for removing media ducts.

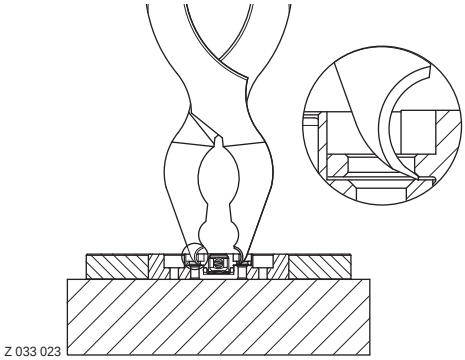

Order no.	Weight
504 015	0.18 kg

Practical example

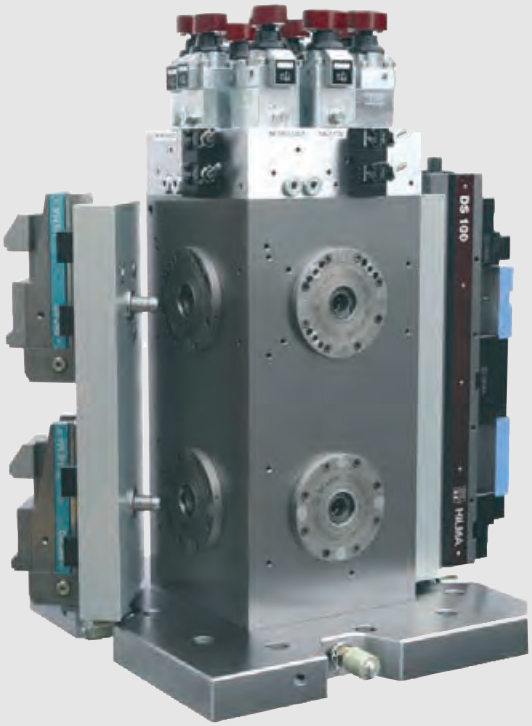

SPEEDY classic 1 fast closing clamps with media ducts fitted to each side of the mounting tower. Machine vices are operated by the control valves fitted at the top.

Technical data see page i.10 / for data sheets and 3D data see www.stark-inc.com

Stark Spannsysteme GmbH
A-6840 Götzis
Tel. +43 (0) 5523 64739-0
Fax +43 (0) 5523 64739-7
verkauf@stark-inc.com
www.stark-inc.com

Subject to modifications
WM-020-217-01-en

Clamp control valve

- Mechanical

Characteristics:
Control valve for checking for secure clamping.

Application:
The clamping check must be used on all rotary machines!

Particularly important for vertical changing processes and on lathes.

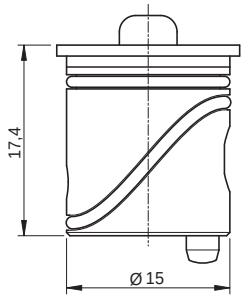

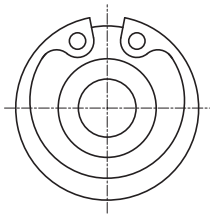

Z 704 210

Order no.	Max. pressure	Weight	Data sheet
704 210	10 bar	0.01 kg	D024

Hydraulic schematic

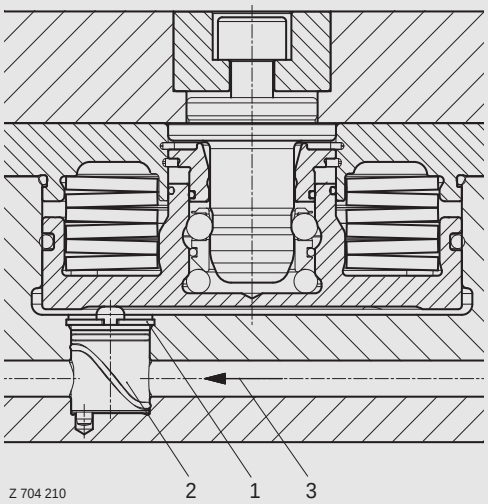

Z 704 210

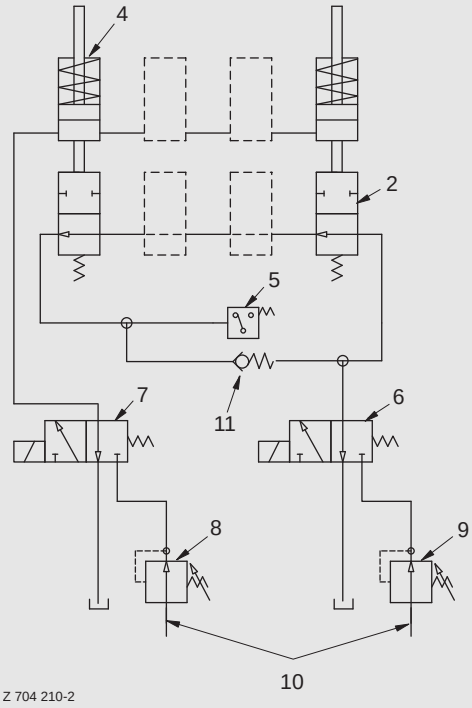

Z 704 210-2

1) Locking ring
2) Clamp control valve
3) Flow direction
4) SPEEDY
5) Pressure switch for clamping signal
6) Hydraulic valve for clamping check
7) Hydraulic valve for releasing the SPEEDY
8) Pressure limiting valve, 40 bar (80 bar)
9) Pressure limiting valve, 8 bar
10) Oil supply from machine
11) Non-return valve (bypass)

This hydraulic schematic is only an example and explains the principle of operation.

SPEEDY accessories

7

For maintenance, transport and installation of your SPEEDY's we supply the right accessories.

They ensure optimal care and a long service life.

SPEEDY special tools for maintenance, transport and installation

Shut-off valve

- Flush mount

Characteristics:
Shut-off valve for installation in the fast closing clamp plates.

Application:
Shutting off individual clamping circuits. Opening and closing by 90° rotation using hex wrench.

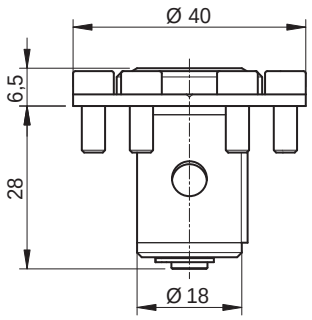

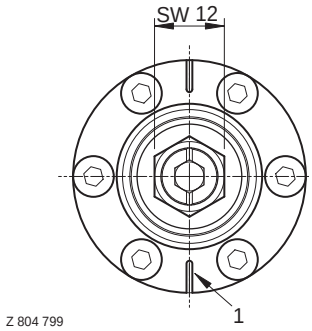

1) Marking for flow

Order no.	Description	Max. pressure	Weight
804 799	Shut-off valve incl. spanner for installation	150 bar	0.30 kg

Procedure for installation

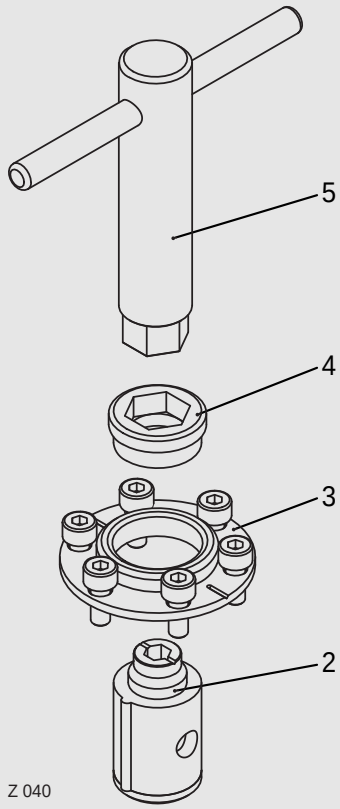

Slide sealing sleeve (2) and valve pin into the bore.

Fit threaded flange (3) using the 6 pcs. M4 screws.

Screw adjusting screw (4) into the threaded flange.

Then tighten the adjusting screw using the spanner for installation (5).

Note: Subsequent sealing possible by tightening the adjusting screw (4).

Stark Spannsysteme GmbH
A-6840 Götzis
Tel. +43 (0) 5523 64739-0
Fax +43 (0) 5523 64739-7
verkauf@stark-inc.com
www.stark-inc.com

Shut-off valve

- Flush mount

Characteristics:
Shut-off valve for installation in the fast closing clamp plates.

Application:
Shutting off individual clamping circuits. Opening and closing by 90° rotation using hex wrench.

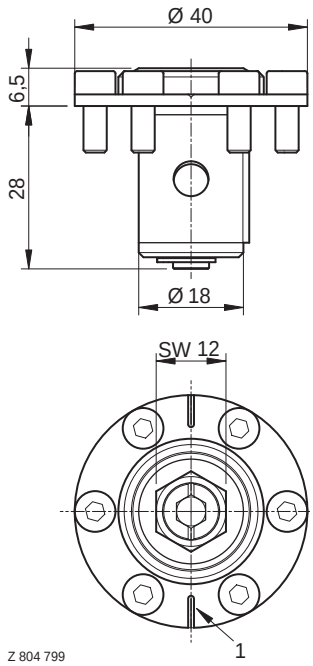

1) Marking for flow

Order no.	Description	Max. pressure	Weight
804 799	Shut-off valve incl. spanner for installation	150 bar	0.30 kg

Procedure for installation

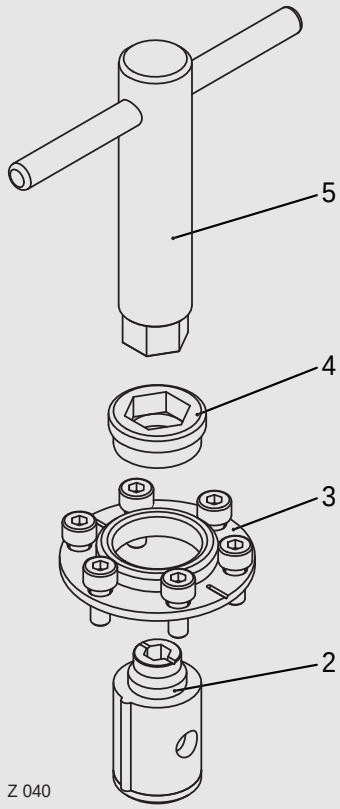

Slide sealing sleeve (2) and valve pin into the bore.

Fit threaded flange (3) using the 6 pcs. M4 screws.

Screw adjusting screw (4) into the threaded flange.

Then tighten the adjusting screw using the spanner for installation (5).

Note: Subsequent sealing possible by tightening the adjusting screw (4).

Stark Spannsysteme GmbH
A-6840 Götzis
Tel. +43 (0) 5523 64739-0
Fax +43 (0) 5523 64739-7
verkauf@stark-inc.com
www.stark-inc.com

Retractable nipple key

Characteristics:
Retractable nipple key for SPEEDY retractable nipple.

Application:
Fitting and removing retractable nipples.

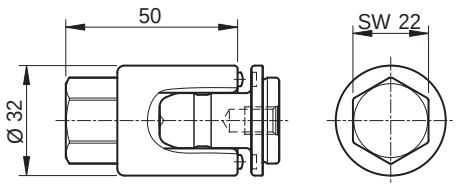

Z 804 254

Order no.	Description	Weight
804 254	Retractable nipple key for SPEEDY retractable nipple	0.08 kg
804 257	Socket 3/8" AF 22 for retractable nipple	

Always use an appropriate torque wrench when fitting a retractable nipple using the retractable nipple key.

Torque wrench

Characteristics:
Adjustable torque wrench.

Application:
Fitting and removing retractable nipples. Note torque data in the related operating instructions!

Order no.	Adjustment range	Accessory	Weight
804 255	5 - 50 Nm	3/8" drive for hex socket head AF 4, AF 5, AF 6	0.60 kg
804 256	20 - 100 Nm	1/2" drive for hex socket head AF 10, socket 1/2" AF 22	

When fitting nipples, note torques as per technical data.

Sealing plug

Characteristics:
Sealing plug with O-ring that prevents the entry of dirt (e.g. coolant).

Application:
Protection for unused SPEEDY fast closing clamps.

Sealing plug (2) is pressed out of the SPEEDY by turning the screw (1) clockwise.

Return spacer (3) to original position prior to inserting again.

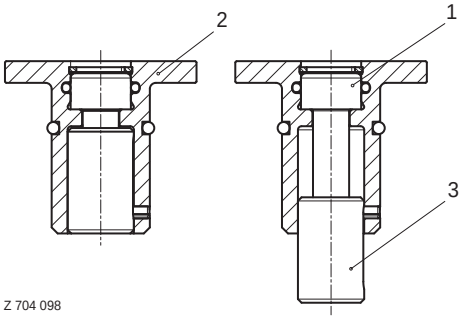

Z 704 098

1) Screw
2) Sealing plug
3) Spacer

Order no.	Description	Weight
704 098	Sealing plug for SPEEDY classic 1	0.04 kg

Covering with longer pallets, workpieces or jigs is possible with the recessed sealing plug.

Technical data see page i.10 / for data sheets and 3D data see www.stark-inc.com
Stark Spannsysteme GmbH
A-6840 Götzis
Tel. +43 (0) 5523 64739-0
Fax +43 (0) 5523 64739-7
verkauf@stark-inc.com
www.stark-inc.com
Subject to modifications
WM-020-217-01-en

Application example

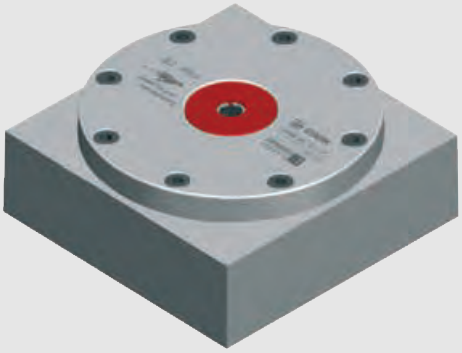

Transport protection

Characteristics:
Plastic protective cap.

Application:
Protection against damage to the retractable nipple and pallet surface during transport or stacked storage.

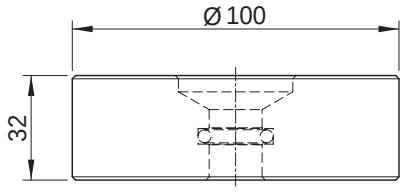

Z 704 130

Order no.	Description	Weight
704 130	Transport protection for SPEEDY classic 1 retractable nipple	0.30 kg

For SPEEDY classic 1 with media ducts a special version of the transport protection is supplied – please state in the order.

Application example

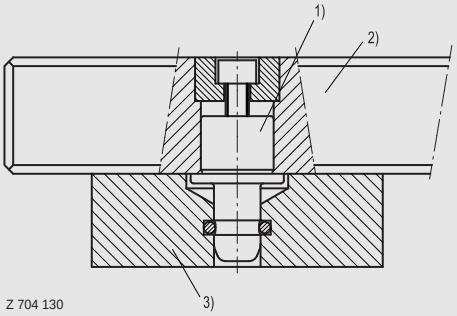

Z 704 130

1) Retractable nipple
2) Pallet
3) Transport protection

Technical data see page i.10 / for data sheets and 3D data see www.stark-inc.com

Service-set O-rings

Characteristics:
Service-set comprising all O-rings and the locking ring.

Application:
Maintenance of SPEEDY classic 1 fast closing clamps.

Attention:
The fast closing clamp is always under spring pressure!

Only an authorised service engineer is allowed to undertake installation work on the fast closing clamps. All necessary safety measures are to be taken without exception during all work!

Order no.	Description	Weight
804 191	Service set for SPEEDY classic 1	0.01 kg

Service set cup springs

Characteristics:
Service set comprising cup springs for SPEEDY classic 1.

Application:
Maintenance of SPEEDY classic 1 fast closing clamps.

Attention:
The fast closing clamp is always under spring pressure!

Only an authorised service engineer is allowed to undertake installation work on the fast closing clamps. All necessary safety measures are to be taken without exception during all work!

Order no.	Description
804 950	Cup spring pack for SPEEDY classic 1 (6.700 N) 6 pieces
804 951	Cup spring pack for SPEEDY classic 1 (10 N) 4 pieces
804 952	Cup spring pack for SPEEDY classic 1 compact (6,500 N) 8 pieces

STARK recommends regularly checking the insertion force using the mechanical insertion force tester (order no. 504 001).

Circlip pliers

Characteristics:
180 mm internal, straight version.

Order no.	Description	Weight
504 006	Circlip pliers	0.20 kg

Technical data see page i.10 / for data sheets and 3D data see www.stark-inc.com

Stark Spannsysteme GmbH
A-6840 Götzis
Tel. +43 (0) 5523 64739-0
Fax +43 (0) 5523 64739-7
verkauf@stark-inc.com
www.stark-inc.com

Subject to modifications
WM-020-217-01-en

Mechanical insertion force tester

Characteristics:
The insertion force on the SPEEDY fast closing clamps is reliably checked with the aid of the SPEEDY insertion force tester. Fatigued spring packs can cause the insertion force to change as a function of the actuation cycles and wear, the insertion force stated is then no longer reached and the machining forces are no longer fully absorbed by the SPEEDY zero point clamping system. STARK recommends an annual preventative check on the fast closing clamps (note operating instructions or table in the introduction, i.8).

Application:
Installers, fitters and operators who assemble, fit, service and operate the SPEEDY zero point clamping system. They should be familiar with the use of hydraulic equipment. Attention, only trained personnel are allowed to perform all service and maintenance work.

Order no.	Description	Weight
504 001	Mechanical insertion force tester SPEEDY classic 1	2.70 kg
	Bearing ring	0.90 kg
	Adapter - retractable nipple SPEEDY classic 1	0.80 kg
	Spacer washer, for SPEEDY classic 1 Twister	0.02 kg
		SET weight: 5.70 kg

The system accuracy depends not only on the geometry of the joint, the insertion force of the zero point clamping systems also has a significant impact on a positive, stable joint.

For safety reasons it is recommended to regularly check the insertion force of the SPEEDY zero point clamping system.

For this purpose, STARK offers a fully mechanical insertion force tester. Its principle of operation is based on a linear change in the length of components that is proportional to force. The length change is converted into a force and indicated on an analogue dial gauge.

The mechanical insertion force tester is characterised by its accuracy (measurement precision ±3 %) and robustness. Low cost and reliable, without any electronics. We supply the mechanical insertion force tester calibrated, with inspection stamp and measuring instructions in a high quality plastic box.

STARK provides training courses for training your operators and service personnel. Training courses are held on site or at Stark Spannsysteme GmbH.

Please ask for information, we would be pleased to advise you.

Supplied in plastic case:
(L390 x W280 x H110)

Insertion force tester (1) with calibration certificate and operating instructions in a plastic box, with bearing ring (2), retractable nipple adapter (3) and spacer washer (4)

Calibration:
STARK recommends annual calibration of the insertion force tester, the insertion force tester can be sent to STARK for calibration in the original plastic box.

Stark Spannsysteme GmbH
A-6840 Götzis
Tel. +43 (0) 5523 64739-0
Fax +43 (0) 5523 64739-7
verkauf@stark-inc.com
www.stark-inc.com

Hydraulic installation aid

Characteristics:
Hydraulic installation aid comprising knurled nut, assembly aid with connection for handpump, expanding mandrel and centring shells.

Application:
Removal/installation of the retaining ring and ball cage, for use in any position, for quick and easy installation.

Attention:
The fast closing clamp is always under spring pressure!

Only an authorised service engineer is allowed to undertake installation work on the fast closing clamps. All necessary safety measures are to be taken without exception during all work!

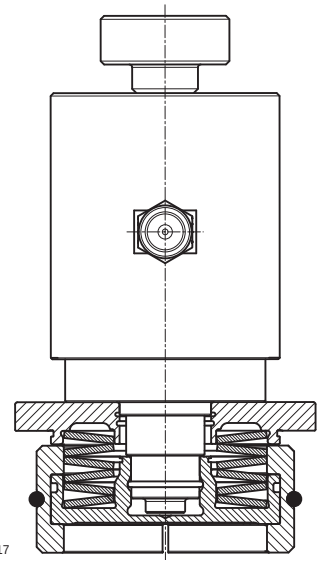

Order no.	Description	Weight
504 011	Hydraulic installation aid	3.10 kg
801 001	Hydraulic pump	

Installation aid

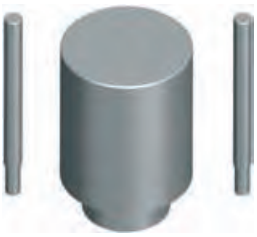

Characteristics:
Installation aid comprising centring dowel and two centring pins.

Application:
Removal/installation of cup springs and cover.

Attention:
The fast closing clamp is always under spring pressure!

Only an authorised service engineer is allowed to undertake installation work on the fast closing clamps. All necessary safety measures are to be taken without exception during all work!

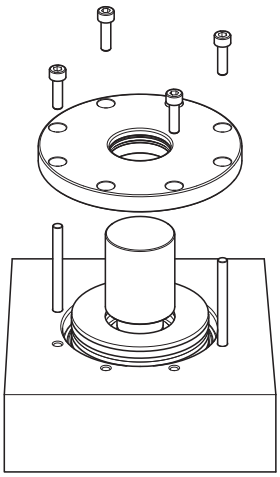

Order no.	Description	Weight
504 008	Centring aid	0.15 kg

Stark Spannsysteme GmbH
A-6840 Götzis
Tel. +43 (0) 5523 64739-0
Fax +43 (0) 5523 64739-7
verkauf@stark-inc.com
www.stark-inc.com

Order number index

0353-217 ..... 4.4
0353-714 ..... 4.4
0381-206 ..... 4.4
105 010 ..... 5.2
105 020 ..... 5.2
105 030 ..... 5.2
105 040 ..... 5.3
105 050 ..... 5.3
105 060 ..... 5.4
105 070 ..... 5.4
105 080 ..... 5.5
105 090 ..... 5.5
3812-005 ..... 4.4
3887-015 ..... 4.4
3890-059 ..... 4.4
3890-071 ..... 4.4
3890-076 ..... 4.4
504 001 ..... 7.5
504 006 ..... 7.4
504 008 ..... 7.6
504 011 ..... 7.6
504 015 ..... 6.8
703 009 ..... 6.5
703 010 ..... 6.5
703 011 ..... 6.5
703 012 ..... 6.5
703 013 ..... 6.5
703 014 ..... 6.6
703 015 ..... 6.6
703 016 ..... 6.6
703 017 ..... 6.6
703 018 ..... 6.6
703 022 ..... 6.5
703 023 ..... 6.6
704 098 ..... 7.2
704 130 ..... 7.3
704 150 ..... 4.3
704 151 ..... 4.3
704 152 ..... 4.3
704 153 ..... 4.3
704 160 ..... 1.13
704 161 ..... 1.13
704 162 ..... 1.13
704 163 ..... 1.13
704 200 ..... 6.3
704 201 ..... 6.3
704 203 ..... 6.4
704 208 ..... 6.7
704 210 ..... 6.9
704 240 ..... 3.6
704 242 ..... 3.6
704 301 ..... 1.4
704 302 ..... 1.4
704 303 ..... 1.4
704 304 ..... 1.4
704 305 ..... 1.4
704 306 ..... 1.4
704 307 ..... 1.4
704 308 ..... 1.4
801 001 ..... 7.6
801 009 ..... 3.8
801 010 ..... 3.8
801 011 ..... 3.9
801 012 ..... 3.9
801 030 ..... 1.10
801 032 ..... 1.10
802 101 ..... 2.2
802 102 ..... 2.2
802 103 ..... 2.3
802 104 ..... 2.3
802 110 ..... 2.4
802 111 ..... 2.4
802 112 ..... 2.4
802 113 ..... 2.4
802 151 ..... 2.2
802 152 ..... 2.2
802 153 ..... 2.3
802 154 ..... 2.3
803 710 ..... 1.12
803 711 ..... 1.12
804 180 ..... 2.11
804 191 ..... 7.4
804 209 ..... 3.2
804 219 ..... 3.2
804 226 ..... 3.2
804 228 ..... 3.2
804 230 ..... 3.2
804 232 ..... 3.2
804 234 ..... 3.2
804 236 ..... 3.2
804 238 ..... 3.3
804 240 ..... 3.3
804 242 ..... 3.3
804 244 ..... 3.3
804 249 ..... 3.4
804 250 ..... 3.4
804 251 ..... 3.4
804 252 ..... 3.4
804 253 ..... 3.4
804 254 ..... 7.2
804 255 ..... 7.2
804 256 ..... 7.2
804 257 ..... 7.2
804 259 ..... 2.10
804 269 ..... 3.7
804 271 ..... 3.7
804 272 ..... 3.6
804 330 ..... 1.3
804 331 ..... 1.2
804 347 ..... 1.3
804 348 ..... 1.2
804 354 ..... 2.9
804 355 ..... 2.9
804 356 ..... 2.9
804 370 ..... 2.12
804 371 ..... 2.12
804 372 ..... 2.12
804 374 ..... 2.13
804 375 ..... 2.13
804 376 ..... 2.14
804 377 ..... 2.14
804 378 ..... 2.14
804 379 ..... 2.13
804 380 ..... 2.13
804 381 ..... 2.13
804 382 ..... 2.14
804 395 ..... 2.12
804 398 ..... 2.15
804 399 ..... 2.15
804 411 ..... 4.2
804 412 ..... 4.2
804 419 ..... 4.3
804 427 ..... 4.3
804 432 ..... 4.2
804 433 ..... 4.2
804 443 ..... 4.5
804 444 ..... 4.5
804 445 ..... 4.5
804 500 ..... 1.7
804 510 ..... 3.6
804 510-R 3.6
804 620 ..... 1.5
804 621 ..... 1.5
804 622 ..... 1.5
804 623 ..... 1.5
804 630 ..... 1.6
804 631 ..... 1.6
804 632 ..... 1.6
804 633 ..... 1.6
804 700 ..... 1.13
804 701 ..... 1.13
804 710 ..... 1.13
804 711 ..... 1.13
804 720 ..... 1.13
804 721 ..... 1.13
804 799 ..... 7.1
804 950 ..... 7.4
804 951 ..... 7.4
804 952 ..... 7.4
808 100 ..... 1.9
808 103 ..... 1.8
808 104 ..... 1.8
808 106 ..... 1.8
808 107 ..... 1.8
808 110 ..... 1.9
820 002 ..... 2.6
820 011 ..... 2.6
820 012 ..... 2.6
820 048 ..... 2.7
820 049 ..... 2.7
820 050 ..... 2.7
820 051 ..... 2.7
820 052 ..... 2.7
820 053 ..... 2.7
8600-110 ..... 4.4
8600-111 ..... 4.4
8600-112 ..... 4.4
931 059 ..... 2.10
938 006 ..... 2.10
938 023 ..... 2.10
952 044 ..... 2.12
952 126 ..... 2.11
952 177 ..... 2.11
955 103 ..... 2.10
999 104 ..... 2.15

Technical data see page 10 / for data sheets and 3D data see www.stark-inc.com

Stark Spannsysteme GmbH
A-6840 Götzis
Tel. +43 (0) 5523 64739-0
Fax +43 (0) 5523 64739-7
verkauf@stark-inc.com
www.stark-inc.com

Subject to modifications
WM-020-217-01-en

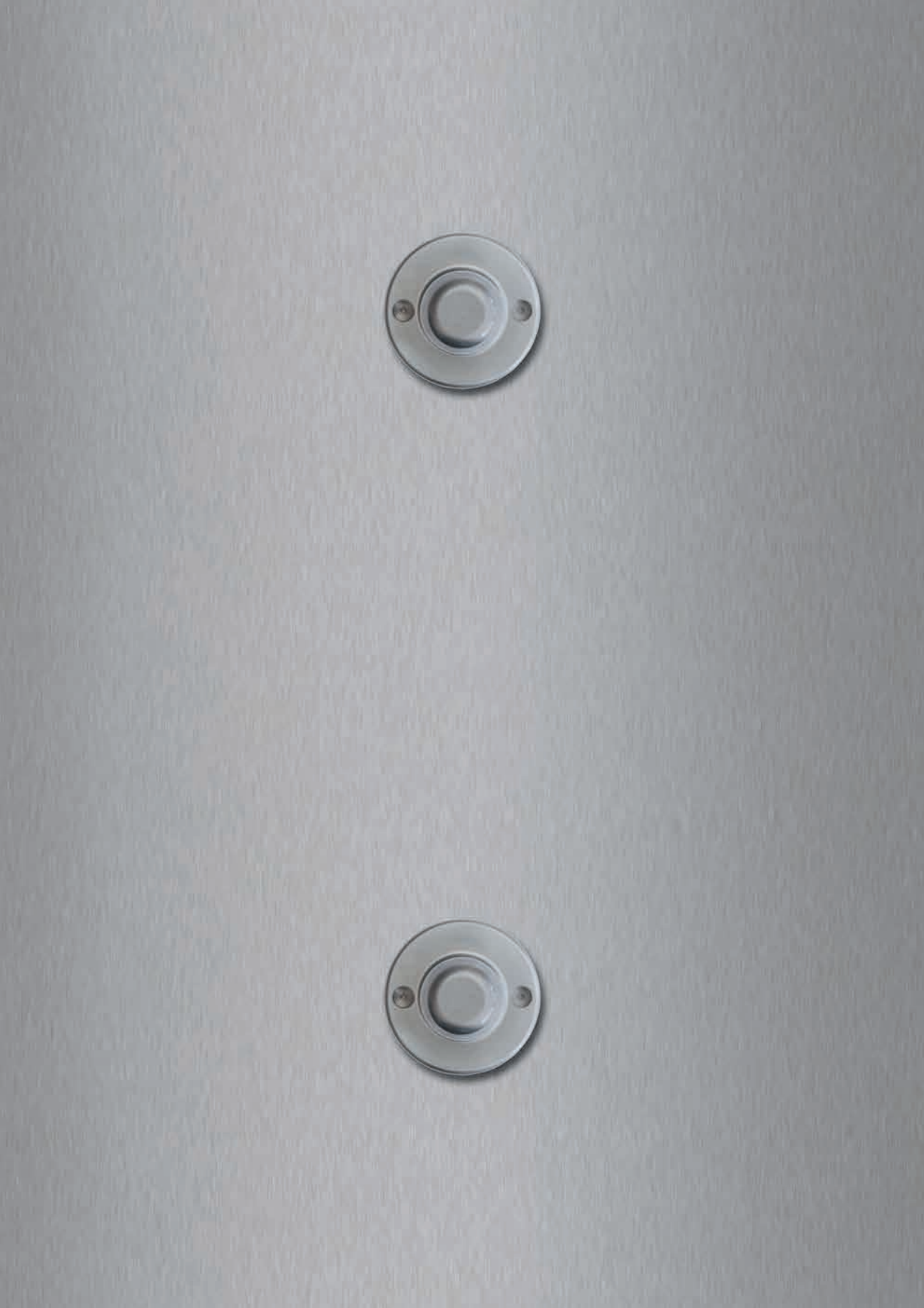

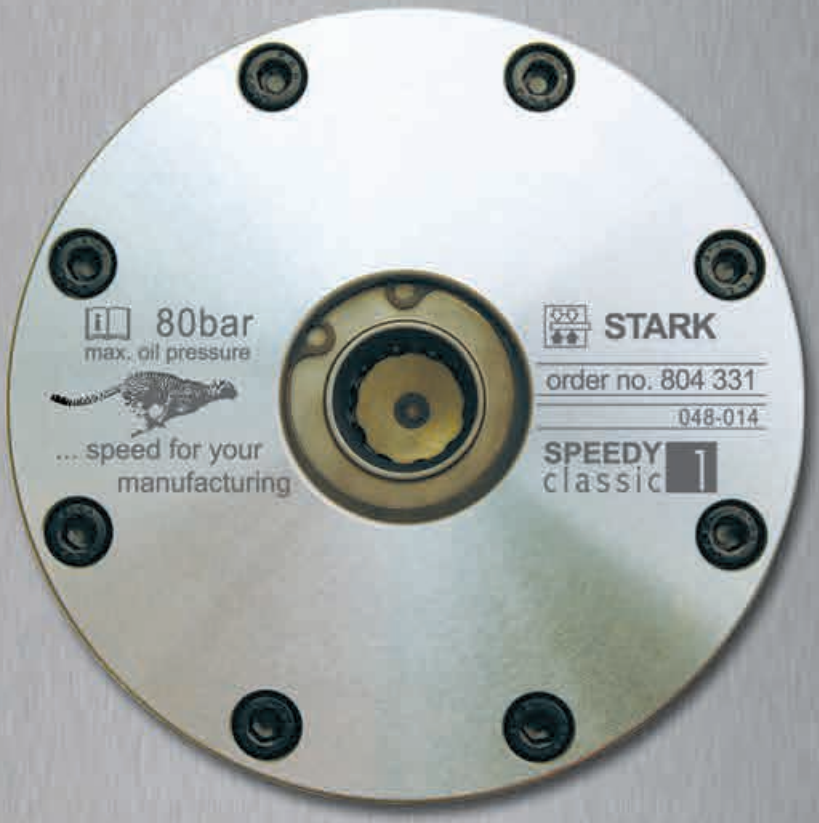
80bar
max. oil pressure
... speed for your
manufacturing
STARK
order no. 804 331
048-014
SPEEDY
classic 1

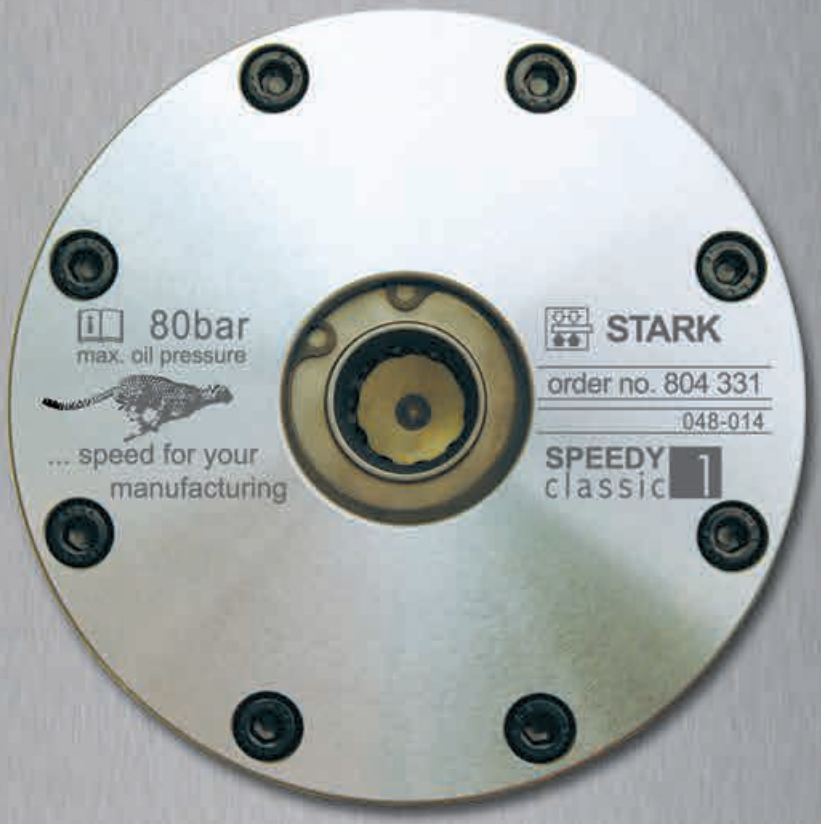
80bar
max. oil pressure
... speed for your
manufacturing
STARK
order no. 804 331
048-014
SPEEDY
classic 1

ROEMHELD
HILMA ▪ STARK

STARK Zero Point Clamping Systems

Consultation, planning, design, production, mounting, service - everything from a single source

Cost savings in manufacturing are these days increasingly only possible during machine set-up and by shortening the process times. Your production will be significantly faster by using zero point clamping systems.

Key aspects such as focusing on bottlenecks, shortening of cycle times, batch sizes and inventory reduction, to name but a few advantages, are implemented quickly in manufacturing by using STARK zero point clamping systems.

Utilise the extensive experience and flexibility of specialists in zero point clamping technology to optimise your production.

The clamping system SPEEDY classic 1 is robust in use, thanks to its low height and variable spacing it is also very well suited to one-off parts as well as small and large production runs.

Due to the special retractable nipple contour and the matched radii, the bore is not damaged on insertion in the SPEEDY. No chips can be jammed in the cylindrical bore and due to the optimal application of force - the retractable nipples are fixed positively and highly accurately by spring action - bending or lifting is not possible and as a result high positioning accuracy is guaranteed.

In addition, if required SPEEDY can be equipped with an integrated media duct to carry media, e.g., oil, air or water. Draw-in, position, clamp, release and lift out - SPEEDY classic 1 integrates everything in one intelligent clamping system.

Stark Spannsysteme GmbH
Kommingerstraße 48
A-6840 Götzis
Tel. +43 (0) 5523 64739-0
Fax +43 (0) 5523 64739-7
verkauf@stark-inc.com
www.stark-inc.com